Global Installation Guide for Suntech Power Standard Photovoltaic Module

V2026_EN A0

Suntech Power Co., Ltd.
Address: No.9 Xinhua Road, Xinwu District Wuxi, 214028 Jiangsu, P.R.China
Customer Service Hot Line: +86 400 8888 009 Fax: +86 510 8534 3321
E-mail: services@suntech-power.com
Or please contact our local representatives, details at www.suntech-power.com

Table of Contents

Introduction ••• **3**

Disclaimer

Laws and Regulations

Safety Guidelines ••• **4**

General Safety

Electrical Safety

Handling Safety

Fire Safety

Chemical Safety

Installation Condition •• **7**

Product Identification •• **9**

Module Diagram

Applicable Product List

Mechanical Installation •• **13**

Installation Notice

Conventional Installation

Mounting Methods and Mechanical Loads

Electrical Installation •• **22**

Electrical Performance

Electrical Connections

Grounding Hole Installation

Offshore Installation •• **25**

Maintenance •• **28**

Routine Inspection

Cleaning

Introduction

First of all, thank you very much for choosing Suntech Power Co., LTD. 's photovoltaic modules (hereinafter referred to as "modules").

This installation manual contains important electrical and mechanical installation information as well as safety information that you must be familiar with, providing important safety instructions for the installation, use and maintenance of solar modules. Users, installation, and maintenance personnel must read this manual carefully and strictly abide by it. Failure to comply with these safety guidelines may result in death, injury or property damage.

The installation and operation of solar modules requires professional skills, and only qualified professionals can perform this work. Please read the safety and installation instructions before operating, installing and maintaining the modules, and keep this manual in a safe place for future reference (maintenance and maintenance), and the installer must inform the end customer (or consumer) of the above matters accordingly.

Disclaimer

Suntech reserves the right to change this installation manual without prior notice. You are advised to visit the Suntech official website http://www.suntech-power.com for the latest version installation manual.

This installation manual does not have any warranty meaning, either express or implied. Suntech shall not be liable for any product defect or destruction, personal injury or property damage caused by any operation during the disposal of modules (including but not limited to disassembly/packaging, loading and unloading, handling, transportation, storage, installation, connection, disassembly, operation and maintenance, etc.). Failure by the customer to follow the requirements set forth in this manual in the installation of modules may result in the invalidation of the limited warranty provided to the Customer. Suntech shall not be liable for any infringement of patent rights or rights of third parties caused by the use of modules. At the same time, the suggestions in this manual are tested and verified by practice, and the purpose is to improve the security and stability of the module during installation and operation.

Laws and regulations

Mechanical and electrical installation of photovoltaic modules should refer to the corresponding regulations, including electrical law, construction law and electrical connection requirements. These regulations vary depending on the installation location, and requirements may vary depending on the voltage, current nature (AC or DC) of the installed system. Please contact your local authority for specific terms.

Safety Guidelines

General Safety

Read and understand all safety rules before installing, wiring, operating, or maintaining modules. When the module is exposed to sunlight or other light sources, direct current (DC) is generated. Whether the modules are connected or not, direct contact with live parts of the modules, such as terminal blocks, may result in injury or death.

Suntech solar modules comply with IEC61215 and IEC61730 standards, meet the requirements of safety Class II, and its application class rating is Class A: The module can be used in public exposure, voltage greater than 50V or power greater than 240W systems.

For your safety, please do not perform installation and maintenance work without safety precautions, including but not limited to fall protection, ladders or stairs, and personal protective equipment.

For your safety, do not install or handle modules in dangerous or harsh environments, including but not limited to strong winds, rain, snow, or dust storms.

Please ensure that you install or handle the integrity of the modules, do not use or install damaged modules, including but not limited to the surface (back) glass is not damaged, the backplane is not broken, the junction box lid is kept closed, the cables and connectors are not broken, and there is no bare metal.

All installation work must be in full compliance with local regulations and corresponding national or international electrical standards.

Electrical Safety

No matter whether the module is connected to the system or not, appropriate protective measures should be taken when touching the module or entering the power station, such as: insulation tools, safety hats, insulation gloves, safety belts and insulation shoes, etc., to avoid direct contact with 30V or higher DC voltage, 30V or higher DC voltage is potentially fatal.

The module has no switch and can only be stopped by removing the module from light (for example, by shielding it with cloth, cardboard, or a completely opaque material).

In some cases, the open circuit voltage or short circuit current generated by the module exceeds the corresponding values tested under its standard test conditions (STC: irradiance 1000W/m^2, module temperature 25 ° C, atmospheric mass 1.5). Therefore, when calculating the module rated voltage, rated current, safety fuse and control specifications connected to the PV output, it should be multiplied by a reasonable factor, and the safety factor reference value is 1.25. The appropriate coefficients as well as the electrical design and calculation of the system need to be determined by a qualified electrical engineer based on the relevant design regulations and system simulation results.

Use dry tools to install or maintain modules in dry conditions. Do not touch modules when they are wet unless wearing appropriate anti-electric shock equipment; When cleaning modules, follow the instructions in this manual.

To avoid the risk of arcing and electric shock, do not disconnect the module from any electrical appliance while in operation. A faulty connection can also cause arcing and electric shocks. Connectors must be kept dry and clean to ensure they are in good working order. Do not insert other metal objects into the connector or make electrical connections in any other way.

When a grounding alarm occurs in the system, wear protective devices and disconnect the system from the faulty module under safe conditions. Do not touch other parts of the module to avoid potential electric shock.

Only use compatible connectors to connect modules or connect modules to other devices. Removing the connector will result in loss of product warranty.

Handling Safety

To ensure the safety of modules during transportation and storage, unpack modules after they arrive at the installation site.

When stacking modules, strictly comply with the upper limit on the number of layers printed on the packing case. Do not stack more than two layers of vertical packages on the short side, but allow stacking of vertical packages on the long side.

During the storage process, protect the package from damage, and store the module in a dry and ventilated environment to avoid direct sunlight and humidity. If the modules are stored in an uncontrolled environment, they shall not be stored for more than 3 months and additional measures shall be taken to protect the modules from moisture or sunlight.

If the modules will not be installed within a short time after unpacking, the remaining modules should be placed horizontally on the tray in the form of border alignment, and the number of stacked pieces should not exceed 12. This temporary storage method does not allow secondary transfer; If a secondary transfer is required, place scattered modules of the same version together according to the number and placement of the whole package before unpacking, and secure the modules in the manner before unpacking with a packing tape (recommended pulling force: 2100N). Finally, apply moisture-proof and dustproof measures before the secondary transfer.

When unpacking the modules, please follow the Suntech official packing and unpacking instructions.

Do not wear metal rings, watches, earrings, nose rings, lip rings or other metal materials when installing or repairing the photovoltaic system.

In any case, do not carry a module by lifting its wires and junction boxes. You can hold the frame of the module while carrying it.

Do not deform or bend modules due to factors other than their own weight during transportation or installation.

Do not stand, sit, trample, walk or jump on the assembly.

Do not apply excessive loads to modules or twist modules.

Do not disassemble or remove any part of the assembly, including but not limited to nameplates, labels, junction boxes, connectors, frames, etc.

Do not paint or apply any other adhesive to the surface of the module.

Drilling in the frame of the module is prohibited, which will result in a reduced load resistance of the module and will lose the limited warranty of the module.

Do not damage or scratch the front or back of the module, which may affect the safety of the module. If the front or back of the module is damaged, do not use the module.

Do not drop or stack heavy objects, tools or sharp objects equal to modules.

Do not pull hard, scratch or bend the cable too much, otherwise the insulated part of the cable will be damaged, resulting in leakage or electric shock. (The minimum bending radius of a cable is 43mm.)

Do not insert any conductive material into the connector of the module.

Do not use mirrors or other magnifying glasses to artificially focus sunlight on the modules.

It is prohibited to lift or fix modules by supporting their front glass or back sheet. Improper supporting may cause module cracking, damage and personal injury. Always handle modules by their frames only.

Do not repair modules by yourself.

Do not use damaged modules.

Do not expose modules or junction box connectors to unauthorized chemical substances. Including but not limited to gasoline, white flower oil, activating oil, mold temperature oil, motor oil (e.g. KV46), lubricating grease (e.g. Molykote EM series), lubricating oil, rust prevention oil, stamping oil, butter, diesel oil, cooking oil, acetone, alcohol, air essence, bone-setting water, Tena water, release agent (e.g. Pelicoat) S-6, etc.), board adhesives and potting adhesives that can produce oxime gas (such as KE200, CX-200, Chemlok, etc.), TBP (plasticizer), cleaning agent, herbicide, paint remover, binder, rust inhibitor, scale remover, emulsifier, cutting oil and cosmetics, etc. For more information, please contact Suntech Technical Support.

Fire Safety

Before installing modules, consult local laws and regulations and comply with the installation or building fire safety guidelines and requirements. Suntech modules have passed the IEC61730 standard fire rating test.

During roof installation, the roof must be covered with a layer of fire-resistant material suitable for this grade, and adequate ventilation between the back of the module and the mounting surface must be ensured. The minimum distance between the modules and the roof surface is 10 cm.

The different structure and installation methods of the roof will affect the fire safety performance of the building, and if the installation is not appropriate, it may cause fire.

The fire rating is valid only if the module is installed in the manner required by the installation instructions. For fire safety requirements and guidance for buildings and structures and support systems at the project site, please consult the relevant local agencies and support suppliers.

Use appropriate modules such as fuses, circuit breakers, and ground connectors according to local regulations.

Do not install or use modules near open flames or flammable or explosive objects.

Do not use water to extinguish the fire when the power supply is not disconnected.

Chemical Safety

In some coastal installation scenarios, the modules of corrosion protection products have certain properties that may pose a safety risk to the personnel installing the modules. Suntech urges anyone involved in or close to corrosion protection solutions to obtain a Material Safety Data Sheet (MSDS) for the selected corrosion protection application.

Whether you choose a fluorocarbon solution or a butyl tape product, read this user manual carefully and strictly follow it. Special protective equipment may be required before or during operation. Please refer to the Material safety data sheet of the product.

Installation Condition

Place and Environment

Modules are suitable for general climatic conditions, i.e. refer to IEC 60721-2-1-Classification of Environmental Conditions Part 2-1: Environmental Conditions occurring in nature. Temperature and humidity.

It is recommended that modules be installed in an environment where the operating temperature ranges from -40 °C to 40 °C. Regardless of the installation conditions, the 98th percentile of the module operating temperature is recommended to be at or below 70 °C. If it is necessary for the 98th percentile of the operating temperature to reach 80 °C, a BOM that meets IEC 63126 Class 1 should be selected.

The module is not suitable for space environment, and it is recommended that the altitude of the module be installed is not more than 2000 meters.

The modules need to be installed in an area where there is no shadow all year round. Ensure that the installation site of the modules is free of obstacles that may block light. If the whole or part of the module is obscured, it will not perform under ideal conditions and result in lower power output. Persistent or frequent shading of the module from sunlight will damage the module and void the warranty

For the double-sided power generation module, under the premise of ensuring the front power generation, the obstruction on the back side of the double-sided photovoltaic module is avoided as far as possible, so that the power generation on the back side is maximized.

Ensure that the wind or snow pressure on the module after installation does not exceed the maximum allowable load.

If the module is installed in an area with frequent lightning activity, it must be protected against lightning strikes.

Do not install modules where there is a risk of flooding or constant exposure to sprinklers or fountains.

In harsh environments such as heavy snow, extreme cold, strong winds, or near water, salt spray on islands or deserts, take appropriate protective measures to ensure reliable and safe installation of modules

Modules can be installed on the roof, but need to be evaluated by a construction expert or engineer, have a formal complete structural analysis results, and be proven to be able to withstand additional system support pressures, including the weight of the photovoltaic module itself.

Do not install the module in an environment with highly corrosive substances such as salt, salt spray, salt water, active chemical vapors, acid rain, or any other substance that will corrode the module, affect the safety or performance of the module.

Based on the distance from the coast, Suntech generally divides coastal installations of photovoltaic systems into 3 categories:

0 m to 50 m, due to concerns about salt spray corrosion, it is recommended to contact the Suntech technical team to evaluate the solution.

From 50 meters to 500 meters, Suntech considers it to be "offshore" installation and must comply with the relevant provisions of "Offshore Installation" in this manual.

At 500 meters and above, Suntech considers the risk of salt spray corrosion to be low and requires only annual preventive maintenance.

Dip Angle and Orientation

The inclination of the module refers to the Angle between the surface of the module and the ground plane, and the power output is maximum when the module is facing the sun.

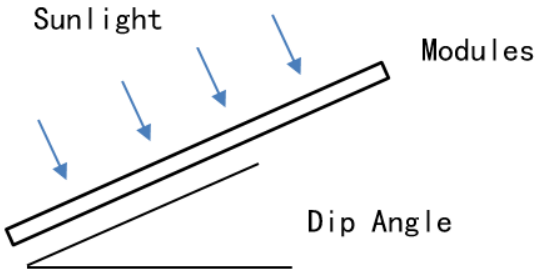

Different projects choose the appropriate installation Angle according to local conditions, Suntech recommends that under the site conditions, follow the principle of maximizing annual power generation as much as possible to install the Angle, so as to reduce the number of module cleaning, the specific installation Angle can be based on the design standards implemented by the project or consult professional solar installers and system integrators. For installation at a small Angle (Suntech recommends that the installation Angle be no less than 10°), it is recommended to increase the cleaning frequency according to the actual situation to avoid long-term accumulation of large amounts of dust, which will affect the appearance and performance of the modules.

When installing photovoltaic modules in the northern Hemisphere, the optimal installation direction of the module is to face south; When installing photovoltaic modules in the Southern Hemisphere, the optimal installation direction of the module is to face north.

Serial connected PV modules should be installed in the same orientation and Angle. If the orientation or Angle is different, there may be output power loss caused by mismatch due to the different amount of solar radiation received by each module.

Product Identification

Module Diagram

Single-glass module	Double-glass module
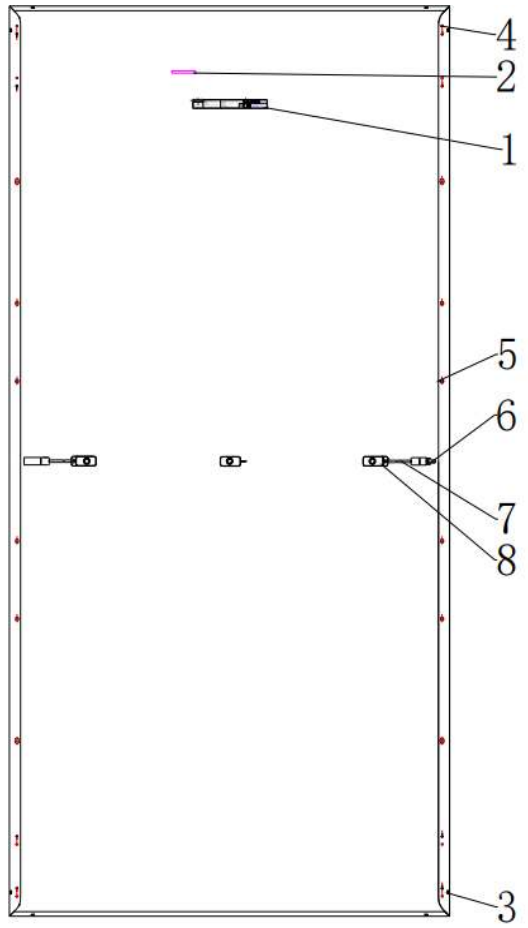	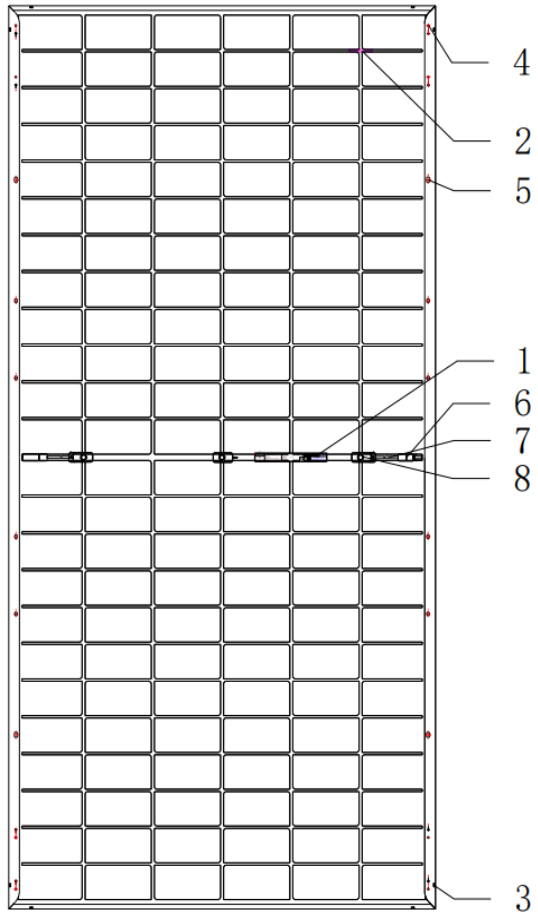
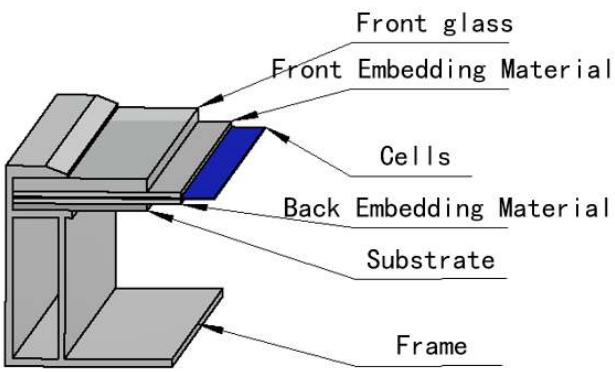	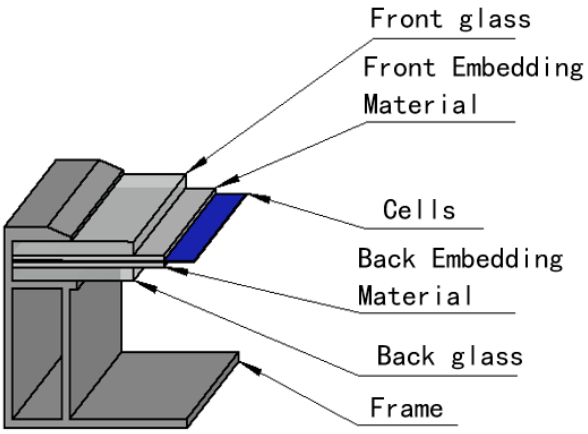
1-Module Nameplate 3-Dewatering Hole 5-Mounting Hole 7-Cable	2-Module Barcode 4-Ground Hole 6-Coupler 8-Junction Box

Each module has three labels providing the following information:

1. Nameplate: describes model number; electrical properties like rated power, rated current, rated voltage, open circuit voltage, short circuit current etc., mechanical properties like weight, dimensions etc., certification information, company information as well as product origin.

2. Barcode: each individual module has a unique serial number. The serial number has 18 digits. The 15th and the 16th digits are the week code, and the 17th and the 18th digits are the year code. For example, STP xxxxxxxxxxxxxx2414 means the module was assembled and tested in the 24th week of 2014. Each module has only one bar code. It is permanently attached to the interior of the module and is visible from the top front of the module. This bar code is inserted prior to laminating.

**Typical serial number barcode label*

3. Sorting label: Consists of barcode and current sorting information. Modules are sorted out and categorized according to each of their output current, which is demonstrated with a symbol "I_x" on the right. “x” refers to 1 or 2 as modules usually grouped in two classes. In order to get optimal performance out of a string, it is recommended to connect modules with the same "I_x" class (for example only I_2 modules). The barcode on the left is the same with aforementioned “Barcode” section.

**Sorting label*

Note: Do not remove any labels. Removing any of these will void the Suntech warranty.

Applicable Product List

Suntech Module Type		Module Dimension (Length × Width × Thickness) (Length and width tolerance ±2mm)
C54 single-glass series	STPXXXS-C54/Umh	1722mm × 1134mm × 30mm
	STPXXXS-C54/Umhm	
	STPXXXS-C54/Umhb	
	STPXXXS-C54/Nsh	
	STPXXXS-C54/Nshm	
	STPXXXS-C54/Nshb	
C54 double-glass series	STPXXXS-C54/Pmh+	1722mm × 1134mm × 30mm
	STPXXXS-C54/Nsh+	
	STPXXXS-C54/Nshm+	
	STPXXXS-C54/Nshb+	
	STPXXXS-C54/Nshkm+	
	STPXXXS-C54/Nshtb+	
C60 double-glass series	STPXXXS-C60/Pmh+	1906mm × 1134mm × 30mm
	STPXXXS-C60/Nsh+	
	STPXXXS-C60/Nshb+	
C72 single-glass series	STPXXXS-C72/Vmh	2278mm × 1134mm × 30(35)mm
	STPXXXS-C72/Vmhm	
	STPXXXS-C72/Vmhb	
	STPXXXS-C72/Nsh	
	STPXXXS-C72/Nshm	
	STPXXXS-C72/Nshb	
C72 double-glass series	STPXXXS-C72/Pmh+	2278mm × 1134mm × 30(35)mm
	STPXXXS-C72/Nsh+	
	STPXXXS-C72/Nshm+	
	STPXXXS-C72/Nshb+	
C78 double-glass series	STPXXXS-C78/Pmh+	2465mm × 1134mm × 30(35)mm
	STPXXXS-C78/Nsh+	
	STPXXXS-C78/Nshm+	
	STPXXXS-C78/Nshb+	
D66 single-glass series	STPXXXS-D66/Wmh	2384mm × 1303mm × 33(35)mm
	STPXXXS-D66/Wmhm	
	STPXXXS-D66/Wmhb	
	STPXXXS-D66/Nsh	
	STPXXXS-D66/Nfb	
D66 double-glass series	STPXXXS-D66/Pmh+	2384mm × 1303mm ×33(35)mm
	STPXXXS-D66-Nsh+	

D60 double-glass series	STPXXXS-D60/Pmh+	2172mm × 1303mm ×33(35)mm
H48 single-glass series	STPXXXS-H48-Nkh	1762mm × 1134mm × 30mm
	STPXXXS-H48-Nfb	
H48 double-glass series	STPXXXS-H48-Nsh+	1762mm × 1134mm × 30mm
	STPXXXS-H48-Nkh+	
	STPXXXS-H48-Nth+	
	STPXXXS-H48-Nfb+	
	STPXXXS-H48-Nsfb+	
H54 double-glass series	STPXXXS-H54-Nsh+	1961mm × 1134mm × 30mm
	STPXXXS-H54-Nkh+	
	STPXXXS-H54-Nth+	
	STPXXXS-H54-Nfb+	
	STPXXXS-H54-Nsfb+	
H66 single-glass series	STPXXXS-H66-Nkh	2382mm × 1134mm × 30mm
	STPXXXS-H66-Nfb	
H66 double-glass series	STPXXXS-H66-Nsh+	2382mm × 1134mm × 30mm
H78 double-glass series	STPXXXS-H78-Nsh+	2465mm × 1303mm × 33mm
I54 double-glass series	STPxxxS-I54-Nsh+	1762mm × 1134mm × 30mm
	STPxxxS-I54-Nth+	
	STPxxxS-I54-Nkh+	
	STPxxxS-I54-Nfb+	
	STPxxxS-I54-Nsfb	
I60 double-glass series	STPxxxS-I60-Nsh+	1952mm × 1134mm × 30mm
	STPxxxS-I60-Nth+	
	STPxxxS-I60-Nkh+	
	STPxxxS-I60-Nfb+	
	STPxxxS-I60-Nsfb+	
NT11/48Q double-glass series	STP-NT11/48QGDF-XXX	1762mm × 1134mm × 30mm
	STP-NT11/48QGSF-XXX	
NT11/66Q double-glass series	STP-NT11/66QGDF-XXX	2382mm × 1134mm × 30mm

If you have previously installed Suntech modules that are not on the list and need inquiries, please contact Suntech Technical Team.

Mechanical Installation

Installation Notice

Please check the optical deviation carefully before installation. Any optical deviation that occurs after the system has been installed may void the warranty. Once incurred, any potential costs such as labor costs, materials costs, documentation costs, personnel security and costs associated with optical deviation elimination are not covered by Suntech's warranty.

The support structure of the module must be made of durable, rust-resistant and UV-resistant materials. Use tested and certified support structures.

In areas where there is a lot of snow in winter, choose the right support system height so that the lowest edge of the module is not covered by snow at any time. In addition, make sure that the lowest part of the module is placed at a sufficient height so that plants and trees do not block the sun.

For ground-mounted systems, Suntech recommends a minimum distance of at least 60 cm from the base of the module.

Modules must be securely placed on support structures. If a clamp is used for installation, the recommended maximum pressure per clamp is 20Mpa to prevent damage to the module bracket. Please follow the fixture system supplier's instructions.

Provide adequate ventilation to the base of the assembly as required by your local regulations. A minimum distance of 10 cm is usually recommended between the roof plane and the support of the modules.

Always follow instructions and safety precautions for module mounts.

Before installing modules on the roof, ensure that the roof is properly constructed. In addition, any roof where modules need to be installed must be sealed to prevent water leakage.

Dust accumulation on the surface of the module can damage the performance of the module. The tilt Angle of the installation module should not be less than 10°, so that dust will be washed by rain. The tilt Angle over the widget requires more frequent cleaning.

The distance between the two modules is recommended to be at least 1 cm to prevent damage caused by thermal expansion.

When installing modules on columns, the column and module support structure must be selected to withstand local wind and snow loads.

Ensure that the modules are not subjected to wind and snow loads exceeding the maximum allowable load, and are not subjected to the thermal expansion generating force of the support structure. Do not allow modules to overlap or exceed the roof. Refer to the following installation methods for details.

Ensure that modules do not appear behind buildings or trees, and that permanent occlusion is prohibited. Regular maintenance management should be carried out to keep modules clean and measures taken to avoid permanent blockage caused by dust or debris. Temporary occlusion can also cause a decrease in the power generation of the module.

Connect the appropriate number of modules according to the voltage specification of the inverter used by the system. Even under the worst local temperature conditions, the voltage generated by the connected modules shall not be higher than the voltage value indicated on the nameplate of the system.

Conventional Installation

Modules can be installed on the support using mounting holes, clamps, or chutes. The recommended torque is 16 Nm - 20 Nm for M8 coarse thread and 10 Nm - 14 Nm for M6 coarse thread. The yield strength of bolts and nuts is greater than or equal to 450MPa. Modules must be installed according to the following sample. Failure to install modules according to the following instructions will void the warranty.

Recommended accessories for module installation are shown in the following table:

Attachment	Type specification		Material	Remark
Bolt	M8 （Recommended full thread）	M6 （Recommended full thread）	Hot dip galvanized or stainless steel	Fastener material selection according to the local environment, it is recommended to use stainless steel material
Plain washer	2 pieces, thickness ≥1.5mm and outer diameter 16mm	2 pieces, thickness ≥1.5mm and outer diameter 12-18mm	Hot dip galvanized or stainless steel	
Spring washer	8	6	Hot dip galvanized or stainless steel	
Nut	M8	M6	Hot dip galvanized or stainless steel	

Under the action of gravity, the glass surface of the module will produce different degrees of subsidence. When storing, transporting, and mounting modules, applying additional forces to the surface of the modules may cause the module shape variable to increase. In the absence of wind load, snow load and other external forces, the maximum allowable shape variable of the module center ΔL=20mm, as shown in Figure 3.

This is an elastic deformation, the module can be restored after removing or removing the load, will not produce hidden cracks and power attenuation of the battery, but it is easy to produce ash, need to improve the frequency of cleaning the ash on the surface of the module.

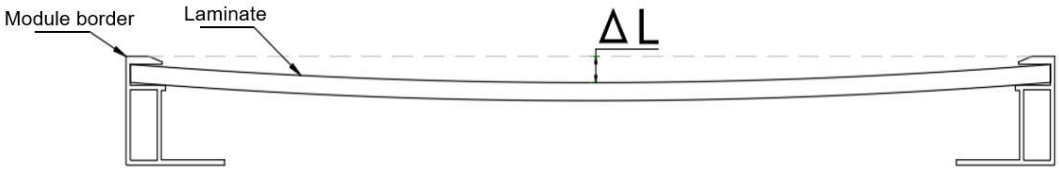

Figure 3 Schematic Diagram of Module Deformation without External Force

The photovoltaic module tracks the mounting mode of the bracket, and the maximum variable allowed at the edge of the module ΔL=25mm, as shown in Figure 4.

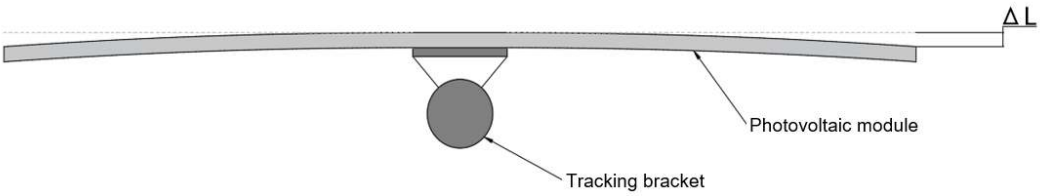

Figure 4 Tracker Mounting System Module Deformation Diagram

After evaluation, the appearance caused by self-weight or other loads is not identified as a defect and is not covered by the warranty.

Bolt mounting

Each module frame is equipped with at least 4 mounting holes sized ϕ9×14 mm compatible with M8 bolts (most module versions have 8 holes, hereinafter referred to as outer four holes and inner four holes). Some module versions are additionally provided with φ7×10 mm mounting holes compatible with M6 bolts (hereinafter referred to as 400/790 holes), as shown in the following Figure 5

Modules shall be mounted to the support structure using bolts in the mounting holes designated by Suntech. Each module shall be fastened with a minimum of four fixing points, distributed in pairs on two opposite sides. An appropriate bolt length shall be selected based on the actual module frame height.

The recommended tightening torque for M6 bolts is 9–12 Nm, and the recommended tightening torque for M8 bolts is 17–23 Nm.

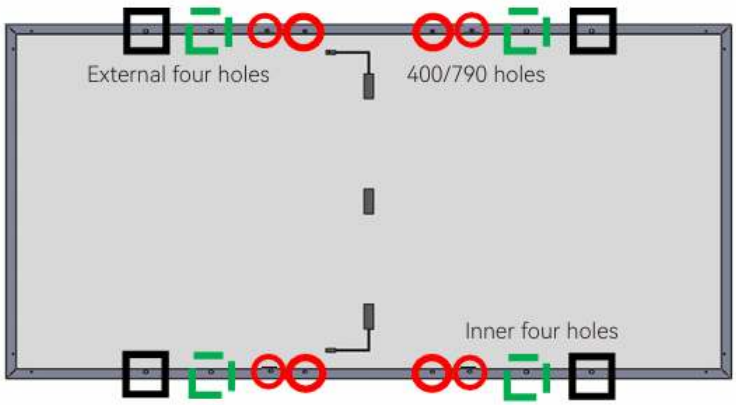

Figure 5 Module Installation Hole Diagram

Suntech PV module bolt installation method is shown in the following Figure 6:

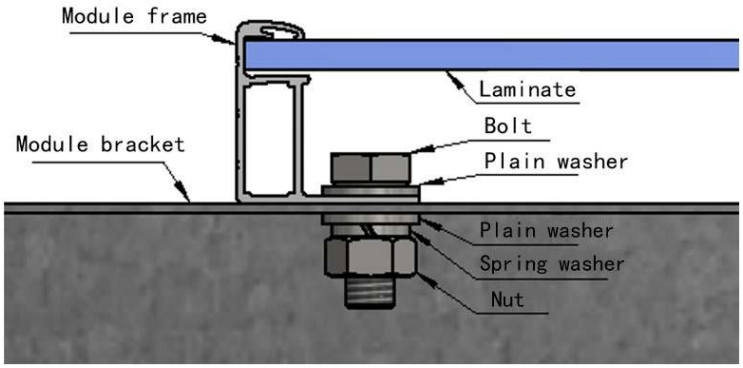

Figure 6 Bolt Installation Method

Clamp installation

The length of the mounting structure must exceed the dimensions of the PV module; otherwise, prior confirmation from Suntech is required.

The clamp installation method varies according to the structure of the mounting bracket. Follow the installation guide recommended by the installation system supplier.

Each aluminum clamp is supplied with one M8 bolt, one flat washer, one spring washer, and one M8 nut. The use of square nuts is recommended.

Each module shall be fastened with a minimum of four fixing points, distributed in pairs on two opposite sides. The clamp needs to be arranged symmetrically. The clamp shall be installed within the scope authorized by Suntech. The inside side of the clamp and the side of the photovoltaic module should be completely fitted.

In any clamp installation mode, the clamp must not touch the glass or deform the frame of the bracket or module. Do not damage the coating on the frame surface during installation.

Module jigs and chutes should be avoided to form shadows overshadowing the solar cell. Avoid sealing or covering the drain holes on the assembly brackets. The overlapping width between clamps and the module frame shall be at least 10 mm (the clamp profile may be modified provided reliable installation of the PV module is ensured).

Installation shall be performed with specialized clamps. Aluminum alloy clamps of 6005-T5 grade are recommended. Figure 7 shows the mid-mount clamp, and Figure 8 shows the end-mount clamp together with its cross-section. Dimensions for mid-mount and end-mount clamps: a $\geq$ 50 mm, b $\geq$ 26 mm, c $\geq$ 5 mm, d $\geq$ 28 mm, Φ = 9 mm. Wall thickness is recommended to be $\geq$ 4 mm. When bolts and screws are of Grade 8.8, the recommended tightening torque is 17–23 Nm. Refer to the installer or mounting structure supplier for specific torque values.

To prevent frame detachment after module installation, it is recommended to use end-mount clamps and mid-mount clamps whose contact surfaces with Frame Surface A feature knurled groove structures.

Approximately 9 knurled grooves are recommended, with a spacing of about 1.2 mm between adjacent grooves and a groove depth of about 0.6 mm, as shown in the cross-section of the end-mount clamp in Figure 8.

(For installation using clamps that do not meet the above requirements, please contact the Suntech technical team for evaluation.)

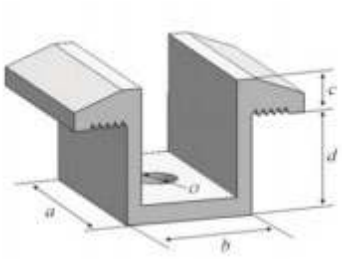

Figure 7 Schematic of Mid-mount Clamp

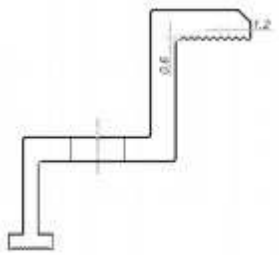

Figure 8 Cross-sectional Schematic of End-mount Clamp

For modules exceeding 2.2 m in length or 1.3 m in width, the use of clamps with special anti-slip design is recommended, such as curved pressing surfaces matching Frame Surface A or latch-type structures. Clamps shall meet the following requirements: a ≥ 60 mm, wall thickness ≥ 5 mm, material 6005-T6, Rp0.2 > 225 MPa, Rm > 265 MPa. For technical requirements and detailed specifications of clamps, please consult the Suntech After-Sales Service Team.

Suntech PV module clamp installation method see the following figure 9:

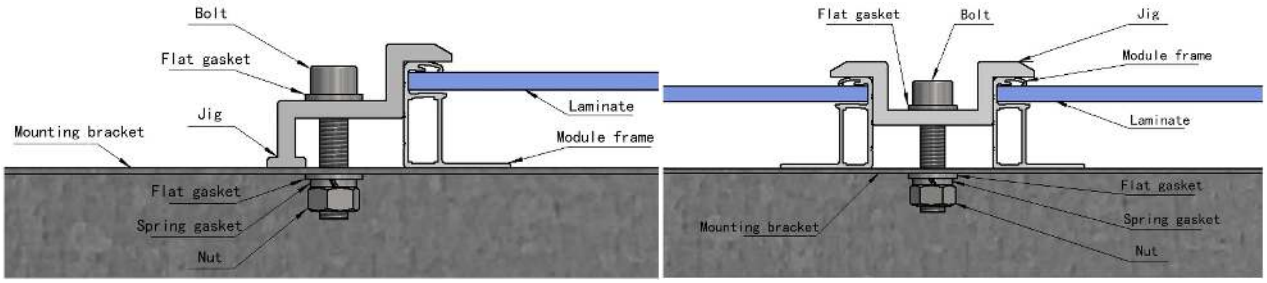

Figure 9 Clamp Installation Method

For structures where the mounting rail is parallel to the frame, overlap the assembly frame mounting surface and the rail by at least 20mm, as shown in Figure 10.

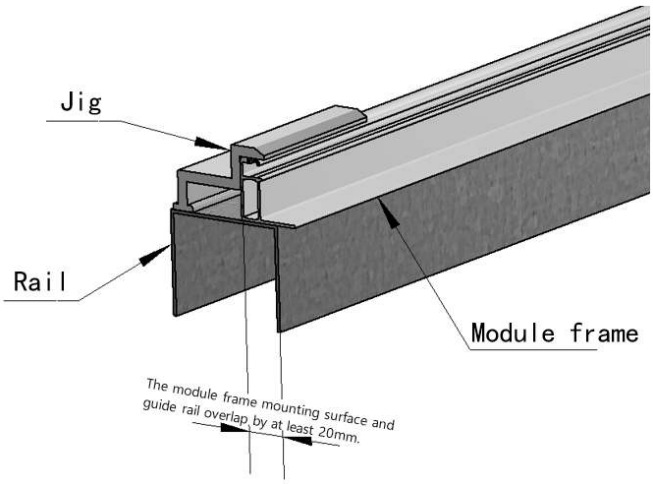

Figure 10 Mounting Rail Layout Diagram

Modules can be mounted horizontally and vertically.

The assembly must be securely attached to the support in order to withstand the corresponding positive and negative pressure. The installer must be responsible for ensuring that the clamps used to secure the modules are of sufficient strength.

To ensure maximum safety against wind and snow loads, it is recommended that all available mounting holes be used. For coastal areas or regions with strong winds, the use of four bolts plus pressure blocks is strongly recommended.

Mounting Methods and Mechanical Loads

Select the appropriate mounting method based on the load requirements (see below for more details).

The loads described in this manual are test loads. The design load of the project needs to depend on the project location, local climate, support structure and relevant specifications. Support suppliers and professional engineers are responsible for determining the design load. According to the installation requirements of IEC 61215/61730, a safety factor of 1.5 times should be taken into account when calculating the corresponding maximum design load. For more detailed information, please follow the local laws and regulations and the instructions of the structural engineer.

Test load =1.5 (safety factor) * Design load

The figure in the table below is for reference only, Suntech does not provide any installation related parts, installers or trained professionals must be responsible for the design of the PV system, installation and local load value calculation and safety responsibilities.

For each mounting method, modules can be mounted vertically or horizontally.

Conventional installation

Note: The loading values listed below are based on Suntech's internal assessment.

Mounting with Holes and Bolts (Beam Perpendicular to Long Frame)

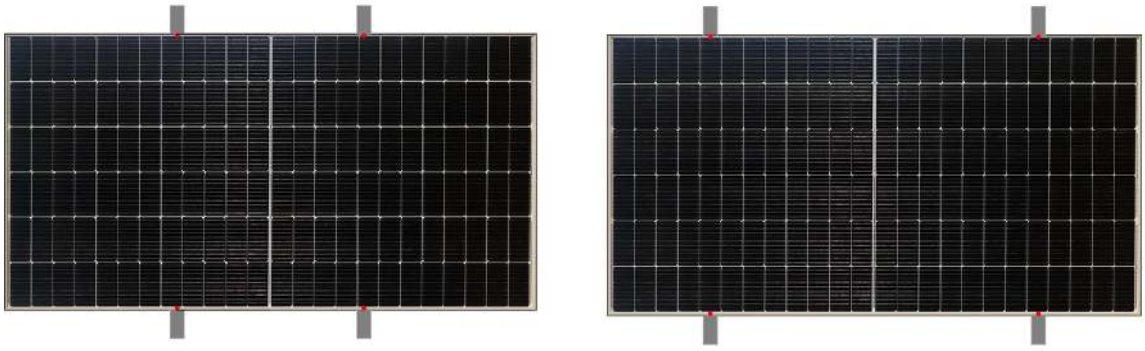

Module type	Inner Four-Hole Mounting Maximum Test Mechanical Load (Pa)	Outer Four-Hole Mounting Maximum Test Mechanical Load (Pa)
C54 single-glass series	+5400/-2400	/
C54 double-glass series	+5400/-2400	/
C60 double-glass series	+5400/-2400	/
C72 single-glass series	/	+5400/-2400
C72 double-glass series	/	+5400/-2400
C78 double-glass series – 35 mm Frame	/	+5400/-2400
C78 double-glass series – 30 mm Frame	+5400/-2400	+3600/-2400

D60 double-glass series – 35 mm Frame	/	+5400/-2400
D60 double-glass series – 33 mm Frame		+5400/-2400
D66 single-glass series – 35 mm Frame	/	+5400/-2400
D66 double-glass series – 35 mm Frame	/	+5400/-2400
D66 double-glass series – 33 mm Frame	/	+5400/-2400
H48 single-glass series	/	+5400/-2400
H48 double-glass series	/	+5400/-2400
H54 double-glass series	/	+5400/-2400
H66 double-glass series	/	+5400/-2400
H78 double-glass series	+5400/-2400	+5400/-2400
I54 double-glass series	+5400/-2400	/
I60 double-glass series	+5400/-2400	/
NT11/48Q double-glass series	/	+5400/-2400
NT11/66Q double-glass series	/	+5400/-2400

Long Frame Clamp Mounting
(Beam Perpendicular to Long Frame)

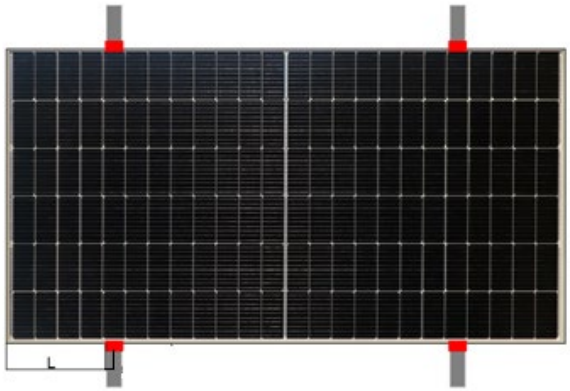

Module type	Installation Range L (mm)	Maximum test mechanical load (Pa)
C54 single-glass series	200≤L≤400	+5400/-2400
C54 double-glass series	200≤L≤400	+5400/-2400
C60 double-glass series	335≤L≤435	+5400/-2400
C72 single-glass series	400≤L≤500	+5400/-2400
C72 double-glass series	440≤L≤490	+5400/-2400
C78 double-glass series	480≤L≤580	+5400/-2400
D60 single-glass series	385≤L≤485	+5400/-2400
D60 double-glass series	450≤L≤530	+5400/-2400
D66 single-glass series	450≤L≤550	+5400/-2400
D66 double-glass series	440≤L≤540	+5400/-2400
H48 single-glass series	316≤L≤416	+5400/-2400
H48 double-glass series	316≤L≤416	+5400/-2400
H54 double-glass series	345≤L≤445	+5400/-2400
H66 single-glass series	475≤L≤525	+5400/-2400
H66 double-glass series	440≤L≤540	+5400/-2400
I54 double-glass series	316≤L≤416	+5400/-2400
I60 double-glass series	335≤L≤435	+5400/-2400
NT11/48Q double-glass series	316≤L≤416	+5400/-2400
NT11/66Q double-glass series	440≤L≤540	+5400/-2400

Short Frame Clamp Mounting (Beam Parallel to Short Frame)

Four-Clamp Fixing, Beam Perpendicular to Long Frame

Overlapping width between the beam and module short edge ⩾ 20 mm, Clamp length ⩾ 60 mm

Clamps are recommended to adopt an anti-slip and anti-detachment design with a curved profile to fit Frame Surface A.

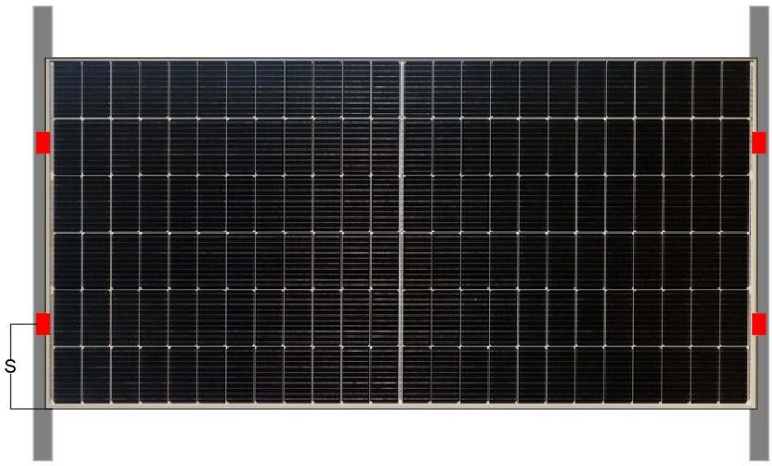

Module type	Installation Range S (mm)	Maximum test mechanical load (Pa)
C54 single-glass series	1/4 of the short frame length ±50 mm	+1600/-1600
C54 double-glass series	1/4 of the short frame length ±50 mm	+1600/-1600
H54 double-glass series	50≤S≤150	+1600/-1600
I54 double-glass series	50≤S≤150	+1600/-1600
I60 double-glass series	50≤S≤150	+1300/-1000

Tracking bracket mounting

The installation methods described in this manual are for guidance only. The design of tracker mounting systems, selection of accessories, and module installation shall be performed by qualified installers. Loads for single-axis mounting systems shall refer to the load values for bolt mounting with 400/790 mm holes, subject to variations in material and design by the mounting system manufacturer. When using buffer pads, install all accessories together onto the rotating shaft and tighten the bolts with a wrench. Install accessories as close to the module center as possible. If a junction box is located at the module center, position accessories close to the center without contacting the junction box to avoid stress caused by contact with the junction box.

Note: The loading values listed below are based on Suntech's internal assessment.

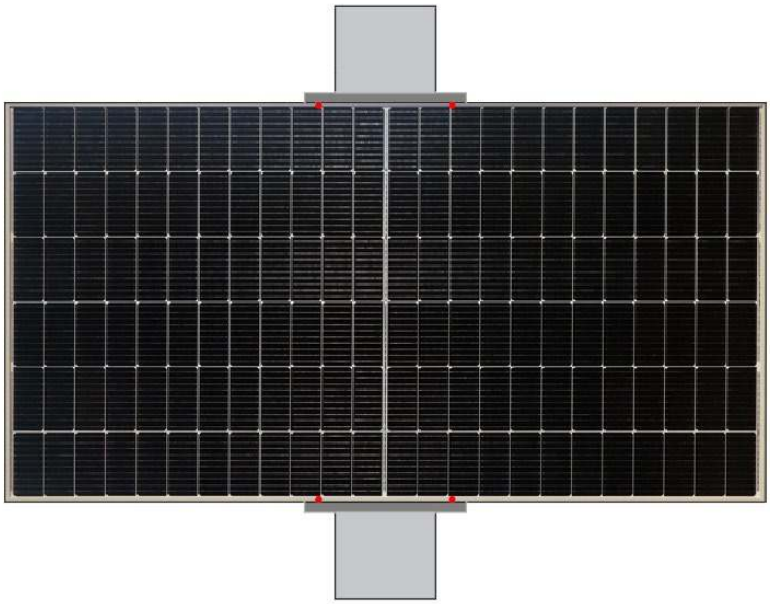

The rotating shaft is perpendicular to the long side, and the installation holes of the long frame are inner four holes (400mm holes) and middle four holes (790mm holes).

Hole spacing / Type	Inner four Holes (Pa)	Middle four holes (Pa)
C72 double-glass series	+1800/-1800	+2400/-2400
C78 double-glass series – 30 mm Frame	/	+2400/-2400
D60 double-glass series – 35 mm Frame	+2200/-2200	/
D60 double-glass series – 33 mm Frame	+2000/-2000	+2800/-2400
D66 single-glass series – 35 mm Frame	+2200/-2200	/
D66 double-glass series – 33 mm Frame	+2000/-2000	+2800/-2400
H66 double-glass series	+1600/-1600	+2400/-2400
NT11/66Q double-glass series	+1600/-1600	+2400/-2400

** The above load values are based on the static load requirements in the IEC61215 standard (Suntech or third party certification body test).*

*** In any case, the module clamp must not touch the front glass or deform the bracket to avoid blocking the solar cell by the module clamp and chute. The clamp cannot seal or cover the drain hole on the assembly bracket.*

Electrical Installation

Electrical Performance

The rated electrical performance data of the module are measured under Standard Test Conditions (STC): irradiance 1000 W/m², AM1.5, cell temperature 25 °C. The main electrical performance parameters, maximum system voltage, and tolerances for Isc, Voc, and Pmpp are detailed in the Suntech module datasheet or nameplate.

Under certain conditions, the current or voltage generated by the module may exceed its operating current or voltage under Standard Test Conditions (STC). Therefore, when determining component ratings and loads, the module short-circuit current under STC shall be multiplied by 1.25, and the open-circuit voltage may be multiplied by a conservative correction factor. When specifying appropriate conductor and fuse sizes, the module short-circuit current shall be further multiplied by 1.25 (i.e., a total multiplier of 1.56) in accordance with local regulations.

Furthermore, a more accurate correction factor for open-circuit voltage may be calculated using the following formula:

$$Cvoc = 1 - \alpha voc \times (25 - Tmin)$$

Where: Cvoc = Correction factor for open-circuit voltage

αvoc (%/°C) = Temperature coefficient of open-circuit voltage for the selected module (refer to the module datasheet)

Tmin (°C) = Minimum expected ambient temperature at the system installation site

The string voltage shall not exceed the maximum voltage the system can withstand, nor the maximum input voltage of the inverter and other electrical equipment in the installation system. To ensure compliance, the string open-circuit voltage may be calculated using the following formula:

$$\text{Maximum system voltage} \geq N \times Voc \times Cvoc$$

Where: N = Number of modules connected in series

Voc = Open-circuit voltage of each PV module (refer to the nameplate or product datasheet)

In accordance with the maximum rated fuse current of the PV module and local electrical installation standards, suitable fuses or anti-reverse diodes shall be provided for the connection of parallel PV module strings for circuit protection.

The electrical design and calculations of the system shall be determined by a qualified electrical engineer.

Electrical Connections

To ensure proper system operation, verify correct cable polarity when connecting PV modules or loads (e.g., inverters, batteries). Improper connection of PV modules may damage bypass diodes. Figure 11 below shows the series and parallel connection methods for PV modules. PV modules may be wired in series to increase voltage; series connection is made by connecting the positive terminal of one module to the negative terminal of the next module. PV modules may be wired in parallel to increase current; parallel connection is made by connecting the positive terminal of one module to the positive terminal of the next module.

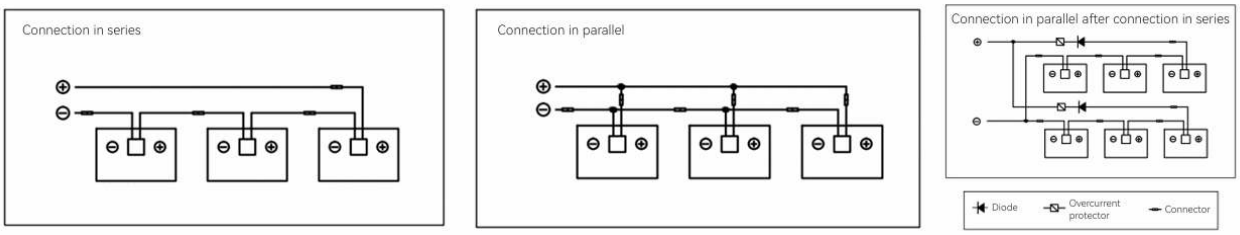

Figure 11 Schematic Diagram of Electric Connection

Special Note: If one array is connected to another with reverse polarity, it will cause irreversible damage to the product. Before paralleling, ensure the voltage and polarity of each string are correct. If measurements show that

the polarity between strings is opposite or the voltage difference exceeds 10V, check the structural configuration before connection.

The number of series and parallel PV modules shall be reasonably designed according to the system configuration. PV modules of different electrical performance models shall not be connected in the same string.

Solar-specific cables and connectors shall be used in the system, and all connections shall be secure and tight. The cable specification shall be 4mm² (12 AWG) and must be able to withstand the maximum open-circuit voltage of the PV system.

When fixing cables to the bracket, avoid mechanical damage to the cables or PV modules, and do not press the cables forcefully. Fix the cables through appropriate methods, and use specially designed UV-resistant cable ties and clips to fix them to the bracket. Avoid direct sunlight and water immersion on the cables.

Keep the connectors dry and clean, and ensure the nuts of the connectors are tightened before connection. Do not connect connectors if they are damp, dirty, or in other poor conditions. Avoid direct sunlight and water immersion on the connectors. Do not drop the connectors on the ground or roof.

Do not plug or unplug connectors when the PV modules are energized. When it is necessary to open the connectors, ensure the PV modules are in a non-operating state, and must use professional unlocking tools and safety protection measures. Do not pull hard or damage the locking structure.

The junction box of the PV module contains bypass diodes connected in parallel to the cell strings of the PV module. The bypass diodes in the junction box can avoid the degradation of PV module performance caused by shading or covering. Please refer to the junction box diode specifications provided in the relevant product datasheet.

When local hot spot phenomenon occurs on the PV module due to shading or covering, the diodes in the junction box will start to work, preventing the PV module current from flowing through the hot spot cells, thereby limiting the heating and performance loss of the PV module. If a diode failure is suspected or found, please contact Suntech; do not attempt to open the junction box cover by yourself.

Grounding Hole Installation

The PV module design uses anodized corrosion-resistant aluminum alloy frames as rigid support. For safe operation and to protect the PV module from lightning and electrostatic damage, the PV module frame must be grounded. During grounding, the grounding device must make full contact with the inner aluminum alloy and penetrate the surface oxide film.

There is a grounding hole with a diameter of approximately Φ4mm near the edge of the module frame, marked with the standard grounding symbol "⏚" next to the hole. A grounding wire may be connected using a bolt. Do not drill additional holes in the module frame or modify the standard grounding hole, otherwise the warranty will be void.

Grounding bolts shall be made of stainless steel. Insert the bolt through the spring washer, cup washer, flat washer, and star washer first, then pass it through the grounding hole in the frame, followed by another spring washer and flat washer, and finally tighten with a nut. Note: The maximum allowable temperature of the conductor is 85℃.For installation details, refer to Figure 12:

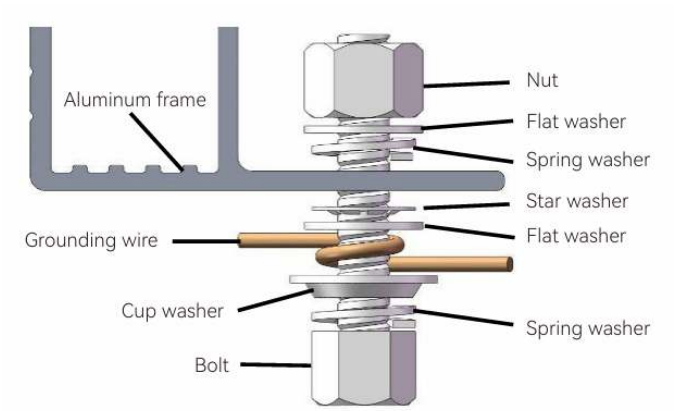

Figure 12 Grounding Aluminum Bezel With Copper Cable

Module Grounding Interconnection:

4mm² copper core wires may be used to connect the grounding holes of adjacent modules to each other, completing the safety grounding between modules.

Connection Method	Parts	Diagram
Place the washers and grounding wire in sequence, insert a bolt through the grounding holes of adjacent modules, and then tighten with a nut to fix the grounding wire, completing the grounding of adjacent modules.		

WARNING: Use welding and grounding devices approved under UL-467, including Burndy (formerly Wiley Electronics) WEEB and similar devices such as barbed washers, which comply with UL-467 and are suitable for electrical bonding and grounding of PV modules.

Other grounding methods may be used when testing the mounting system in accordance with UL 2703 requirements. Do not drill any additional grounding holes in the PV module frame.

The holes marked with the grounding symbol on the frame are for grounding purposes only and shall not be used for module mounting. Electrical connection between modules is prohibited before module grounding.

Offshore Installation

In accordance with the conditions specified in the Suntech Module Installation Manual and the warranty statement, the installation of our PV modules in marine areas must be carried out in strict compliance with this Installation Guide.

This appendix is intended to permit customers to install PV modules within marine areas. It sets forth general requirements to ensure the correct and reliable installation of our PV modules in marine environments, including but not limited to corrosion protection principles for the modules and associated mounting systems.

Before installing PV modules in marine areas, please read this appendix carefully and strictly follow the relevant instructions. Failure to comply with these guidelines and other general corrosion protection principles may result in environmental corrosion damage to the PV modules and mounting system, and will void the limited product and performance warranty of Suntech. For further inquiries, please contact our technical after-sales service department for more information.

The reliability of PV modules is closely related to their distance from the coastline. Marine land areas are classified according to their distance from the coastline. Suntech generally categorizes coastal PV installation types into 5 distinct application scenarios, as shown in the table below:

Scenario Definition	Module	Recommended Requirements for Mounting Structures
Open Sea (Floating)	Dual-glass + double-coated front sheet + AA20 aluminum frame + IP68 junction box and connectors + end caps Recommendation: Dual protection for connectors + waterproof cables	Corrosion Protection
Offshore (Floating / Pile Foundation)	Dual-glass + double-coated front sheet + AA20 aluminum frame + IP68 junction box and connectors + end caps Recommendation: Dual protection for connectors	Corrosion Protection
Tidal Flat (Pile Foundation)	Dual-glass + double-coated front sheet + AA20 aluminum frame + IP68 junction box and connectors + end caps Recommendation: Dual protection for connectors	Corrosion Protection
500m – 2000m from the coast	Ordinary dual-glass module	Standard
≥ 2000m from the coast	Ordinary dual-glass / conventional single-glass module	Standard

1. "Offshore PV" modules refer to a category of modules specially designed for marine areas. Through special material selection and strict enhanced third-party reliability testing, these modules can meet the corrosion-resistant installation and application requirements in marine environments.
2. "Offshore PV" modules must be installed above sea level. After installation, the modules shall not be touched by the highest water level during high tide.
3. Local environmental conditions have a significant impact on the salt spray deposition rate, which largely (but not absolutely) depends on the specific region and local wind patterns. Suntech reserves the right to modify the above definitions in specific cases. Please contact Suntech technical pre-sales support to confirm the category of your PV system.
4. The term "coastline" mentioned in this manual refers to the boundary line between seawater and land at high tide.

5. The "distance from the coastline" mentioned in this manual refers to the shortest straight-line distance between PV modules / strings and the coastline.
6. Please contact the Suntech technical support department for more information on the installation of corrosion-resistant modules. During installation, the module surface shall not contact sharp objects, and no scratches are allowed on the glass, frame, connectors, junction box, etc.
7. Do not alter the module structure, such as drilling holes in the module frame.
8. The process specifications of components and parts must comply with relevant international corrosion protection standards.
9. Perform regular maintenance on anti-corrosion coatings (PV mounting structures, fasteners, grounding devices, etc.).
10. Modules (glass, junction box, connectors, etc.) are prohibited from long-term exposure to corrosive environments containing sulfur, strong acids, strong alkalis, etc. Contact with organic solvents that may damage the front glass anti-reflective coating or the polymers of the junction box and backsheet is also prohibited.
11. Before installation, connectors shall be protected by dust plugs / waterproof caps. After removing the plugs, connectors shall be connected immediately to prevent moisture, mud and other foreign matter from entering and corroding the internal conductive metal parts. For further improved corrosion resistance, cold-shrink tubes may be applied to protect connectors after installation. Connectors and cold-shrink tubes are prohibited from being used underwater. (Cold-shrink tubes shall meet Suntech quality and technical requirements.)

Installation Guidelines for Cold Shrink Tubes		
Procedures	Method Description	Example
1	Disconnect the PV connector and take either end. Slide the cold shrink tube onto the connector in the direction shown in the right figure.	
2	Pull the cold shrink tube over the connector head and leave the head exposed.	
3	Connect the positive and negative poles of the connector correctly.	
4	Move the connection joint to the middle of the cold shrink tube.	
5	Pull the inner strip exposed in the cold shrink tube, rotating while pulling outward until the inner strip is completely removed.	

6	The cold shrink tube will fully shrink and seal the connector.	
Cold Shrink Tube Installation and Notes: ① Ensure there is no sand, water droplets, sharp objects or other debris inside the cold shrink tube before installation. ② Do not bind identification tags to the cold shrink tube to prevent the cable tie from scratching it. ③ Pay attention to on-site environmental protection (disposal of support strips, instructions, packaging bags). ④ The cold shrink tube shall have no cracks or gaps at both ends and no holes on the surface. ⑤ The cold shrink tube shall shrink smoothly and naturally to fit tightly on the connector and cable, without wrinkles or bulges.		

12. All requirements specified in the Suntech Installation Manual shall be followed when installing offshore PV modules.
13. To minimize salt spray corrosion, Suntech recommends the following:

13.1 Corrosion-resistant materials are recommended for mounting structures and system-related installation components (e.g., stainless steel such as SUS 316, hot-dip galvanized carbon steel, Zn-Al-Mg composite coated steel and other new anti-corrosion materials).

13.2 Locking bolts are recommended to avoid torque attenuation of module mounting bolts caused by eddy currents, wind vibration, etc.

13.3 The coating thickness of hot-dip galvanized and anodized components must meet the minimum requirements specified in JIS H 8641 and JIS H 8601.

Maintenance

Please be sure to check and maintain the modules regularly, especially during the warranty period, which is the user's responsibility, and notify Suntech customer service within two weeks if the modules are found to be damaged or other significant anomalies.

Routine Inspection

Regularly inspect PV modules in the PV array for damage that may cause functional or safety failures, such as broken glass, damaged cables, faulty junction boxes, cracked cells, broken backsheets, etc. If any of the above issues occur, the supplier shall be notified promptly to replace the modules with identical types.

Preventive inspections are recommended every 6 months. Do not disassemble or replace components of the PV modules without authorization. If electrical or mechanical performance inspection or maintenance is required, it shall be performed by qualified professionals to prevent electric shock or personal injury.

Routine maintenance shall be carried out to keep PV modules free from snow, bird droppings, seeds, pollen, leaves, branches, dust, dirt, and other contaminants.

Cleaning

If the PV modules are installed with a sufficient tilt angle (at least 15°), cleaning is generally unnecessary as rainfall provides a self-cleaning effect. If excessive dirt accumulates on the module surface and significantly impacts power generation, cleaning shall be performed in the early morning, late evening, or on cloudy days (with irradiance below 500 W/m²).Cleaning at noon or under strong direct sunlight is strictly prohibited. Even during morning and evening hours, cleaning shall only be carried out under low sunlight to avoid glass cover breakage caused by thermal shock to the PV modules.

Cleaning Liquid Requirements:

1) Water shall be neutral, pH: 6–8
2) Conductivity: $\leq$ 500 μS/cm
3) Total dissolved solids (TDS): $\leq$ 1000 mg/L
4) Water hardness: $\leq$ 300 mg/L
5) Water pressure at nozzle: not exceeding 0.5 MPa

Cleaning Precautions:

1) Temperature difference between cleaning water and modules shall not exceed 10 °C. leaning is prohibited when ambient temperature is below 5 °C to avoid freezing cracking of PV glass.
2) Cleaning PV modules is strictly prohibited under weather conditions including wind force above level 4, heavy rain, heavy snow, sand blowing, or hail.
3) Use dry or damp soft clean cloths to wipe PV modules. orrosive solvents or hard objects are strictly prohibited for cleaning.
4) Materials with high roughness and hardness are strictly prohibited for wiping PV modules.
5) Do not clean modules with broken glass or exposed wires to avoid electric shock.
6) Do not leave any cleaned tools on the glass surface, as this may cause hot spots.
7) Do not stand on the module glass surface to avoid cell microcracks.
8) PV module cleaning shall be performed by qualified professional personnel. efore and during cleaning, proper safety protective equipment including safety helmets, safety belts, rubber gloves, insulated shoes, and protective clothing must be worn to prevent falls from height and electric shock.