SBR096-256-UEN-Ver12-202103 Version: 1.2

SBR096/128/160/192/224/256

High Voltage LFP Battery

User Manual

SUNGROW

All Rights Reserved

All Rights Reserved

No part of this document can be reproduced in any form or by any means without the prior written permission of Sungrow Power Supply Co., Ltd (hereinafter "SUNGROW").

Trademarks

SUNGROW and other Sungrow trademarks used in this manual are owned by Sungrow Power Supply Co., Ltd.

All other trademarks or registered trademarks mentioned in this document are owned by their respective owners.

Software Licenses

- It is prohibited to use data contained in firmware or software developed by SUNGROW, in part or in full, for commercial purposes by any means.
- It is prohibited to perform reverse engineering, cracking, or any other operations that compromise the original program design of the software developed by SUNGROW.

Sungrow Power Supply Co., Ltd.

Address: **No.1699 Xiyou Rd., New & High Tech Zone, Hefei, 230088, China.**

Tel: +86 551 6532 7834

Website: **www.sungrowpower.com**

About This Manual

The manual mainly describes the product information, guidelines for installation, operation and maintenance. The manual cannot include complete information the system (i. e. the inverter), just the battery. The reader can get additional information about other devices at **www.sungrowpower.com** or on the webpage of the respective component manufacturer.

Validity

This manual is valid for the following battery models:

- SBR096
- SBR128
- SBR160
- SBR192
- SBR224
- SBR256

They will be referred to as "battery" hereinafter unless otherwise specified.

Target Group

This manual is intended for battery owners who will have the ability to interact with the battery and qualified personnel who are responsible for the installation and commissioning of the battery. Qualified personnel should have the following skills:

- Training for installation and commissioning of electrical system, as well as dealing with hazards
- Knowledge of the manual and other related documents
- Knowledge of the local regulations and directives

How to Use This Manual

Read the manual and other related documents before performing any work on the battery. Documents must be stored carefully and be available at all times.

Contents may be periodically updated or revised due to the product development. It is probably that there are changes of manual in the subsequent battery edition. The latest manual can be acquired via visiting the website at **support.sungrowpower.com**.

Symbols

Important instructions contained in this manual should be followed during installation, operation and maintenance of the inverter. They will be highlighted by the following symbols.

⚠ DANGER

Indicates a hazard with a high level of risk that, if not avoided, will result in death or serious injury.

⚠ WARNING

Indicates a hazard with a medium level of risk that, if not avoided, could result in death or serious injury.

⚠ CAUTION

Indicates a hazard with a low level of risk that, if not avoided, could result in minor or moderate injury.

NOTICE

Indicates a situation that, if not avoided, could result in equipment or property damage.

Indicates additional information, emphasized contents or tips that may be helpful, e.g. to help you solve problems or save time.

Abbreviation

BMS: Battery Management System

BMU: Battery Management Unit

CAN: Controller Area Network

CMU: Battery Cluster Management Unit

LFP: Lithium iron phosphate

PCS: Power Conversion System

SOC: State of Charge

Contents

All Rights Reserved I
About This Manual II
1 Safety 1
1.1 Notices for Safe Use 1
1.2 Battery Handling Information 2
1.3 Emergency Situations 3
1.3.1 Leaking Batteries 3
1.3.2 Fire 3
1.3.3 Wet Batteries 4
1.3.4 Damaged Batteries 4
2 Product Description 6
2.1 Product Introduction 6
2.2 Terminal Description 8
2.3 Symbols on the Product 9
2.4 LED Indicator 10
3 Unpacking and Storage 11
3.1 Unpacking and Inspection 11
3.2 Scope of Delivery 11
3.3 Storage 12
4 Mounting 13
4.1 Safety during Mounting 13
4.2 Location Requirements 13
4.3 Installation Environment Requirements 13
4.4 Installation Clearance Requirements 13
4.5 Installation Tools 14
4.6 Installing the Battery 15
5 Parallel System（Optional） 21
5.1 Scope of Delivery 21
5.2 Mounting the Junction Box 21
5.3 Terminal Description (Junction Box) 22
5.4 Connection Diagram in Parallel System 23

5.5 Installing the SUNCLIX Connector 25
5.6 Installing the COMM IN Connector 27
6 Commissioning 30
6.1 Inspection before Commissioning 30
6.2 Commissioning Procedure 30
7 Decommissioning the Battery 31
8 Troubleshooting and Maintenance 32
8.1 Troubleshooting 32
8.2 Maintenance 36
9 Appendix 38
9.1 Technical Data 38
9.2 Quality Assurance 41
9.3 Contact Information 42

1 Safety

The device has been designed and tested strictly according to international safety regulations. Read all safety instructions carefully prior to any work and observe them at all times when working on or with the device.

Incorrect operation or work may cause:

- Injury or death to the operator or a third party;
- Damage to the device and other properties.

All detailed work-related safety warnings and notes will be specified at critical points in this manual.

> The safety instructions in this manual cannot cover all the precautions that should be followed. Perform operations considering actual onsite conditions.
>
> SUNGROW shall not be held liable for any damage caused by violation of the safety instructions in this manual.

1.1 Notices for Safe Use

Read all safety instructions carefully prior to any work and observe them at all times when working on or with the battery. Failure to observe the precautions described in this section can cause serious injury to persons or damage to property.

DANGER

Risk of explosion

- **Do not subject the battery to any strong force.**
- **Do not mechanically damage the battery (pierce, deform, strip down, etc.)**
- **Do not heat the battery or dispose of the battery in a fire.**
- **Do not install the battery in potentially explosive environments.**

⚠ DANGER

Risk of fire

- Do not expose the battery to temperatures in excess of 60 ° C.
- Do not place the battery near a heat source, such as direct sunlight, a fireplace, a thermally uninsulated wall exposed to sunlight, hot water, or a heater.
- Keep sources of ignition such as sparks, flames, and smoking materials away from the battery.

⚠ DANGER

Risk of electric shock

- Do not disassemble the battery.
- Do not handle a wet battery or use wet tools.
- Do not soak the battery in water or expose it to moisture or liquids.
- Keep the battery away from children and animals.
- Wear suitable clothing, guards and gloves to prevent you from direct contact with the DC voltage.
- Use insulated tools during working with battery.
- Set aside metal jewelry before working on the DC circuit.

1.2 Battery Handling Information

NOTICE

Comply with local standards for use with the battery.

Any man-made damage will void the limited warranty for the battery. Handle the battery with care to protect it from damage.

- Use the battery only as intended and designed.
- The battery must only be installed at a suitable location.
- Make sure the battery is well connected to ground before use.
- Do not use the battery if it is defective, appears cracked, broken or damaged, or fails to operate.
- Do not use the battery together with other types of batteries.
- Do not pull, drag or step on the battery.
- Do not leave any foreign objects inside the battery.

- Do not repair or modify the battery. It is not user serviceable.
- Do not pull out any cables when the battery is powered on.
- Do not damage the sheath of cables, wire harness and connectors.
- While the battery is charged, used and stored, keep it away from materials that are prone to electric discharge, including static discharge.
- Keep the battery away from babies and children to avoid any accidents.
- Cover terminals with insulating tape before proper disposal.

1.3 Emergency Situations

1.3.1 Leaking Batteries

Abuse/misuse/damage of the battery may cause increasing of internal pressure in the battery cells. It may result in the electrolyte venting. In the event that battery electrolyte is released:

- Do not enter the room under any circumstance.
- Avoid contact with the leaking liquid or gas.
- Call the Local Emergency number or Fire Brigade if necessary.

If one is exposed to the leaking substance, follow the suggestions below to minimize the chance of injury:

- Inhalation: Evacuate the contaminated area, and seek medical aid.
- Eye contact: Rinse eyes with copious amounts of water using for at least 15 minutes, and seek medical aid immediately.
- Skin contact: Wash the affected area thoroughly with plenty of water for at least 15 minutes. If possible, remove or saturate contaminated clothing with water. Seek medical aid if the patient is distressed.
- Ingestion: Induce vomiting, and seek medical aid immediately.

Wipe out the contacted area with a sponge or cloth that is soaked in water until you obtain medical aid. These materials can damage skin and eyes, causing blindness.

1.3.2 Fire

Fire may occur with the battery despite its careful design. Likewise, a fire near the battery can cause it to catch fire.

Protective equipment

A respirator is not required during normal operations.

In the event of a fire, hazardous fumes including carbon monoxide, carbon dioxide, and/or various hydrocarbons may be emitted. To comply with the Personal Protective Equipment Directive (89/686/EEC), use a full-face self-contained breathing apparatus (SCBA) with full protective gear during fire fighting.

Fire fighting

NOTICE

In the event of a fire, only qualified firefighters with appropriate protective equipment are permitted to enter the room where the battery is located. Battery fires can take up to 24 hours to fully extinguish. Consider allowing the system to burn. Smoke indicates that the battery is still burning. Always note that there is a risk of the battery re-igniting.

Proceed as follows for firefighting.

1 Shut off any connected power system or electronics such as the battery, battery isolator, PV DC isolator(s), AC isolator, solar supply main switch and normal supply main switch.

2 Perform an adequate knock down on the fire before entering the incident's hot zone.

3 If the battery catches on fire, use an firefighting sandor CO_2 extinguisher to extinguish fire.

4 If the battery becomes involved in fire or is bent, damaged or breached in any way, or if suspect that the battery is heating, use large amounts of water to cool the battery. Do not try to extinguish the fire with a small amount of water. Always obtain an additional water supply.

5 If the fire is not from the battery and has not spread to it yet, use an ABC fire extinguisher to extinguish the fire. Remove batteries and other ignition sources from the scene of a fire.

1.3.3 Wet Batteries

If the battery is submerged in water, do not let people access it, and then contact Sungrow or an authorized service partner for technical support.

If a battery is submerged in water or flooded, first, switch off all circuit breakers in the system to cut off the power supply to the battery. Wait until floodwaters subside and do not approach near battery. If someone needs to go into the flooded water, wear insulated full length rubber boots and gloves.

Do not use a flooded battery again.

1.3.4 Damaged Batteries

The battery consists of lithium ion cells. These are considered dry cell batteries. If damaged, only a small amount of battery fluid can leak.

A damaged battery can cause rapid heating of the battery cells. If you notice smoke coming from the battery area, assume that the battery is burning and take appropriate action as described in "1.3.2 Fire".

Damaged batteries are dangerous and must be handled with extreme caution. They are not fit for use and may pose a danger to people or property. If a battery seems to be damaged:

1 Pack it in its original container.

2 Store it in a separated room like the installation place.

3 Contact SUNGROW.

⚠ DANGER

A damaged battery may release dangerous material and a flammable gas mixture. Never try to repair the battery even if you are qualified electrician.

2 Product Description

2.1 Product Introduction

Brief Introduction

The battery is designed for residential energy storage systems. The inbuilt battery management system monitors its operation and prevents the battery from operating beyond the specified limitations.

This product is a high-voltage battery system with an operating voltage range between 168 V ~ 584 V. A battery system consist of 3 to 8 individual battery modules connected in series.

The battery can be expanded to 4 units in parallel at most. Available in Q3, 2021.

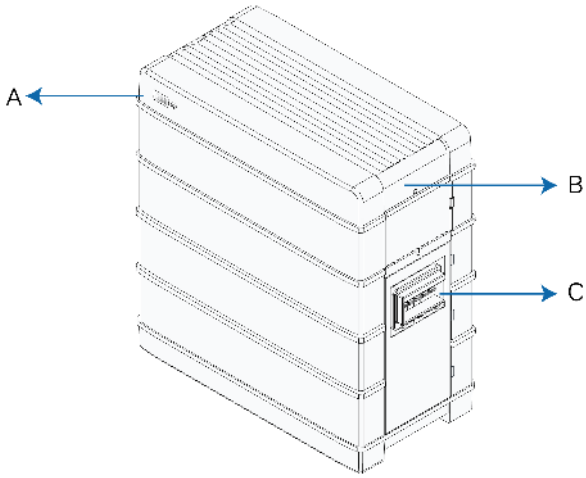

figure 2-1 Product overview

table 2-1 Design of the product

Position	Designation
A	LED Indicator LED indicator include the SOC indicator and the status indicator. The status indicator is also used as the power button. LED indicator indicates the SOC value and status of the battery.
B	Nameplate The nameplate clearly indentifies the product. The nameplate must remain permanently attached to the product. You will find the following information on the nameplate: • SUNGROW logo and product model • Technical data • Product symbol
C	DC circuit breaker

Major Components

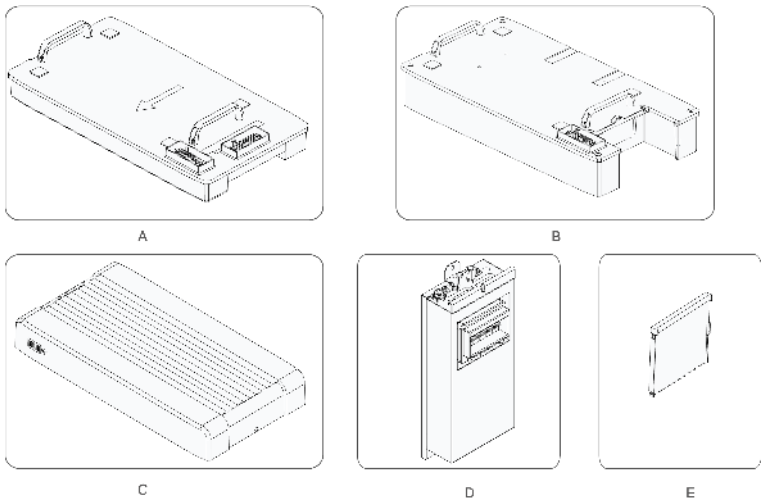

Name	Designation
A	Base
B	Battery module
C	Top cover
D	Switch gear
E	Side cover

Configuration Table

No.	Model	Base	Battery module	Top cover	Switch gear	Side cover
1	SBR096	1	3	1	1	0
2	SBR128	1	4	1	1	1
3	SBR160	1	5	1	1	2
4	SBR192	1	6	1	1	3
5	SBR224	1	7	1	1	4
6	SBR256	1	8	1	1	5

2.2 Terminal Description

All electrical terminals are located at the switch gear.

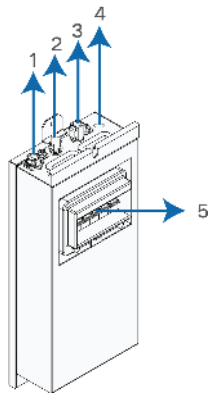

No.	Label	Description
1	COMM	• To enable the communication between the inverter and the battery • For battery daisy chain
2	P-	The system negative terminal, connected to the inverter negative terminal
3	P+	The system positive terminal, connected to the inverter positive terminal
4	⏚	Grounding terminal, connected to the ground
5	DC circuit breaker	To connect/disconnect the DC circuit, for power-on, power-off, and short-circuit protection

2.3 Symbols on the Product

Symblo	Explanation
	Pay attention to the danger. Do not operate this product in the live status!
	No open flames Do not expose to flame, incinerate, puncture, or impact.
	Electric shock hazard Serviced by qualified personnel only. Out of reach from children.
	TÜV mark of conformity
	TÜV mark of conformity
CE	CE mark of conformity

Symblo	Explanation
	Do not dispose in trash. Compacting a lithium ion battery is dangerous as it can explode.
	Please recycle this lithium ion battery. Do not discard.
	Read the user manual before maintenance!
	This is a protective grounding terminal, which should be grounded securely to protect the safety of operators.

2.4 LED Indicator

LED indicators include the SOC indicator and the status indicator. The status indicator is also used as the power button.

SOC Indicator

The SOC indicator indicates the current SOC value of the battery. One bar indicates the SOC value of 10%.

Status Indicator

The Status indicator indicates the current state of the battery.

LED color	LED indicator	LED state	Definition
	Blue	ON	Normal operation (without fault)
		Slow blink Period: 2 s	The battery is at power-on or standby state (without fault).
		Fast blink Period: 0.5 s	The battery is at firmware update state.
	Red	ON	A system fault has occured.
		Blink	The battery is at power-on or standby state (with primary fault).

The status indicator can be used to power on or off the battery.

Operation	Definition
Press and hold for less than 2 seconds	To power on the battery
Press and hold for more than 4 seconds	To power off the battery

3 Unpacking and Storage

3.1 Unpacking and Inspection

The device is thoroughly tested and strictly inspected before delivery. Nonetheless, damage may still occur during shipping. For this reason, please conduct a thorough inspection after receiving the device.

- Check the packing case for any visible damage.
- Check the scope of delivery for completeness according to the packing list.
- Check the inner contents for damage after unpacking.

Contact SUNGROW or the supplier in case of any damage or incompleteness.
Do not dispose of the original packing case. It is recommended to store the device in it.

3.2 Scope of Delivery

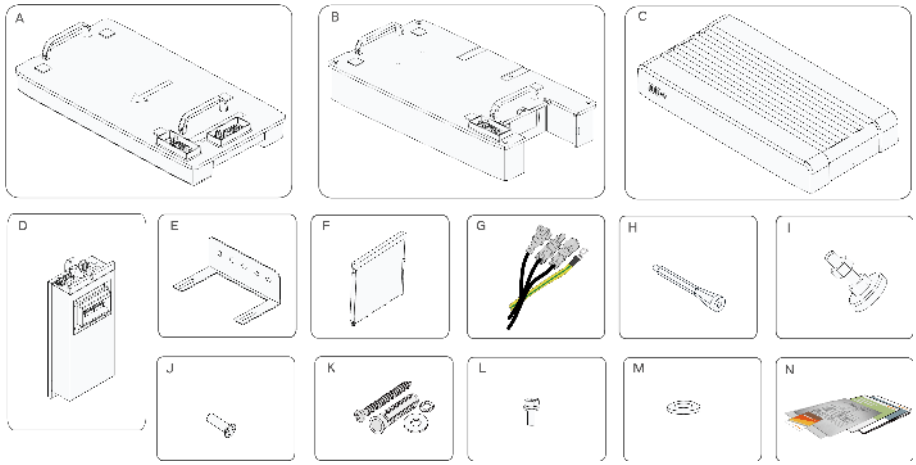

Item	Name	Quantity
A	Base	1
B	Battery module	3 ~ 8
C	Top cover	1
D	Switch gear	1
E	Bracket	1
F	Side cover	0 ~ 5
G	Harness	1
H	Stud	1
I	Foot (optional)	4

Item	Name	Quantity
J	M5 screw	8 ~ 18
K	Expansion plug set	2
L	M5 screw sets	3 ~ 4
M	M6 fender washer	2
N	Documents	1

3.3 Storage

Proper storage is required if the battery is not installed immediately.

- Store the battery in the original packing case with the desiccant inside.
- Preferably, keep the temperature in the range of 15 ° C to 25 ° C. Store the battery within the temperature range of -10 ° C to 35 ° C for no more than 6 months.
- The storage relative humidity must be always between 0 and 95 %, non-condensing.
- Store the battery in a clean and dry place, without exposure to sunlight and rain. The storage location must be free of harmful gases, flammable/explosive products and corrosive chemicals. The battery should be prevented from mechanical impact, high pressure, high-intensity magnetic field and direct exposure to sunlight.
- Pay attention to the harsh environment, such as sudden cooling/heating and collision, to avoid damage to the battery.
- The number of stacking layers of battery modules with package must not exceed 6. It is strictly forbidden to directly stack batteries without package.
- Regularly inspect the package for damage and insect bites. If any damage is found, the product should be replaced immediately.
- The packing should be upright.
- If stored for more than 6 months under the specified conditions, the battery needs to be charged once, until the system SOC is 50% to 80%. Preferably, use an inverter for forced charging.

4 Mounting

4.1 Safety during Mounting

⚠ WARNING

This product or system must be operated by professionals!
Failure to follow the safety instructions in this manual or operation of this product or system by non-professionals may cause severe personal injury or major property damage.

⚠ WARNING

Strictly follow local relevant standards and requirements in the whole process of installation.

4.2 Location Requirements

Select an optimal mounting location for safe operation, long service life and expected performance.
The battery with IP55 can be installed both indoors and outdoors.
Install the battery in a place convenient for electrical connection, operation, and maintenance.

4.3 Installation Environment Requirements

- The installation environment must be free of inflammable or explosive materials.
- The location should be not accessible to children.
- The ambient temperature must be always between 0 ℃ and 45 ℃.
- The relative humidity must be always between 0 and 95 %, non-condensing.
- Avoid direct exposure to sun, rain and snow.
- The battery should be well ventilated. Ensure air circulation.

4.4 Installation Clearance Requirements

- Reserve enough clearance around the battery to ensure sufficient space for heat dissipation.

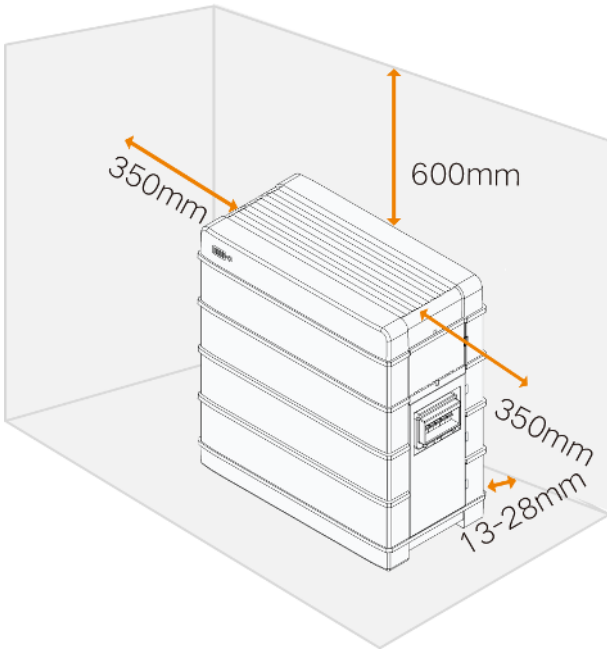

- In case of multiple batteries, reserve specific clearance between the batteries.

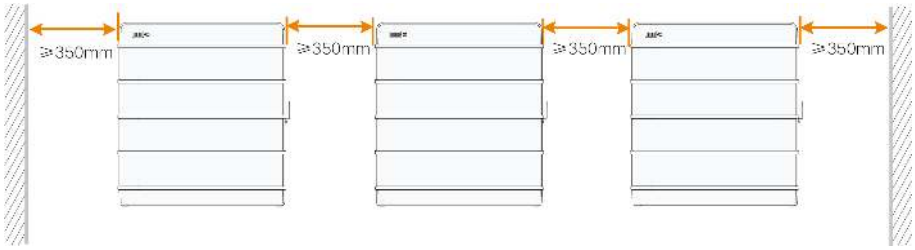

4.5 Installation Tools

Installation tools include but are not limited to the following recommended ones. If necessary, use other auxiliary tools on site.

table 4-1 Tool specification

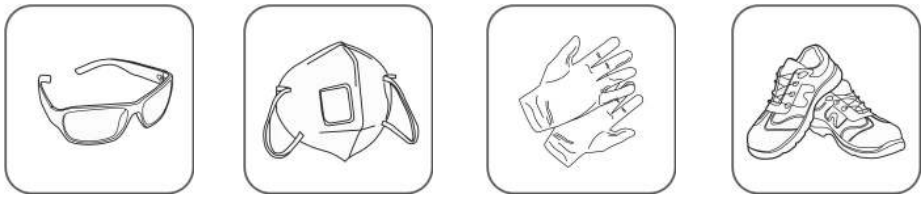

Goggles	Dust mask	Protective gloves	Insulated shoes

4.6 Installing the Battery

The SBR128 mounting will be used as an example.

step 1 Align the base with the wall, and keep a distance of 13 mm to 28 mm between the base and the wall. Mark the hole positions of the mounting bracket with a marker according to the required layout of holes.

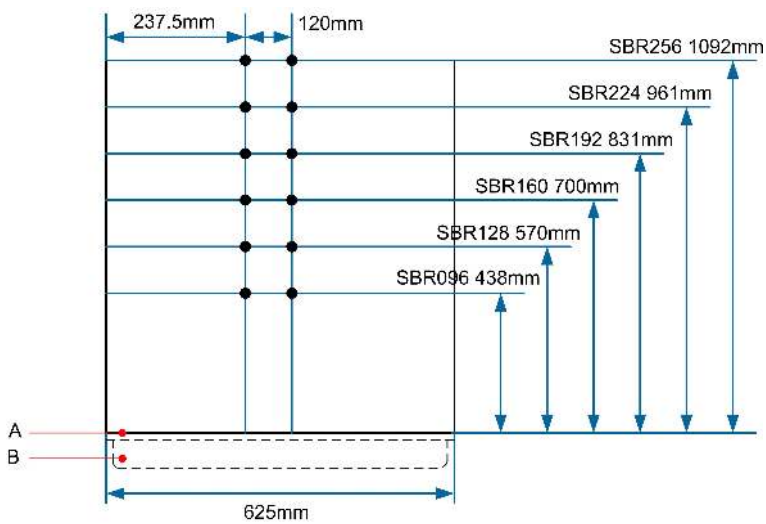

A: Upper surface of the base B: Base

figure 4-1 Layout of holes with the base as reference

> You can choose not to mount SBR096/128 on the wall.

step 2 Drill the holes according to the marked positions, and install the expansion sleeves.

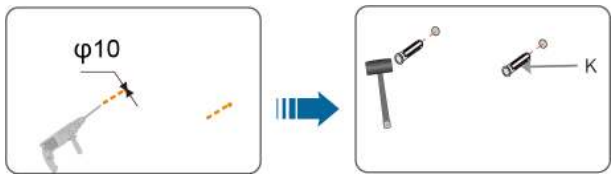

step 3 (Optional) Install the feet of the battery.

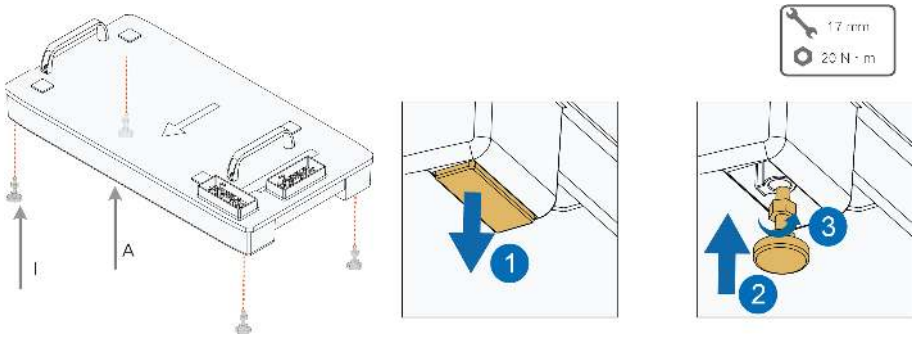

step 4 Position the base maintaining the required distance from the wall.

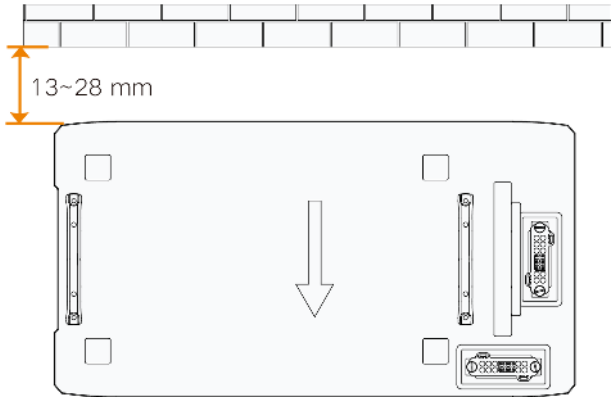

step 5 Place each battery module on top of the base.

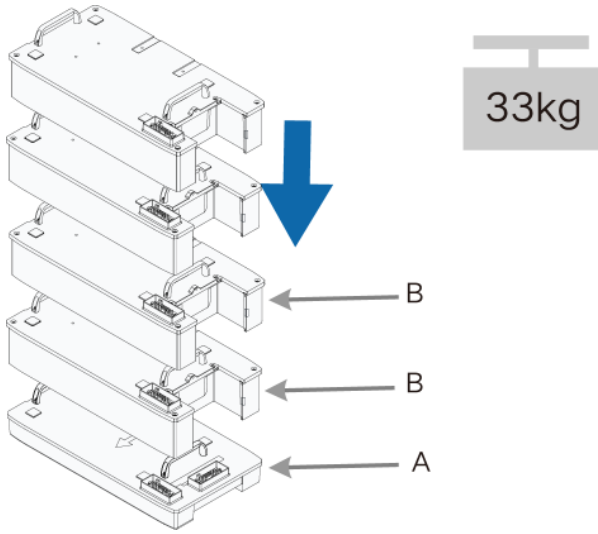

When carrying the battery module, always be aware of its weight of 33 kg.

step 6 Fix the battery modules with the included screws.

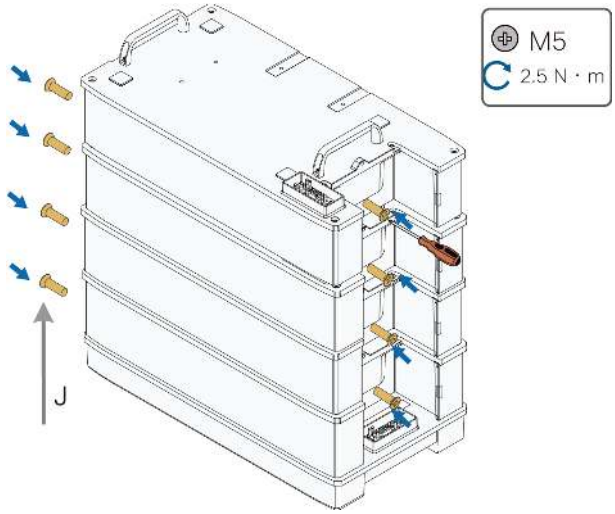

step 7 Connect the switch gear to the base.

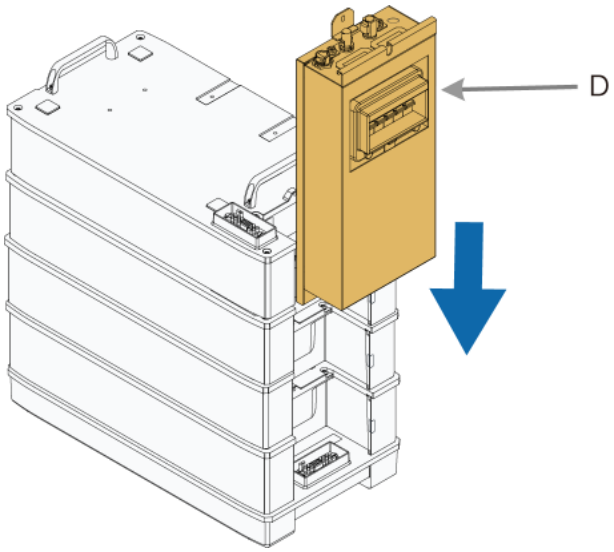

step 8 Fix the switch gear with the provided stud.

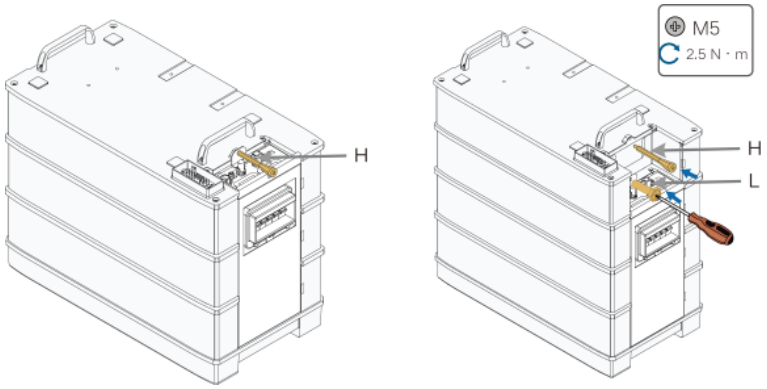

When 4 or more than 4 battery modules are installed in one base, M5 screw set is required to secure the switch gear. The stud is mounted on the top of battery module.

step 9 Fix the battery to the wall.

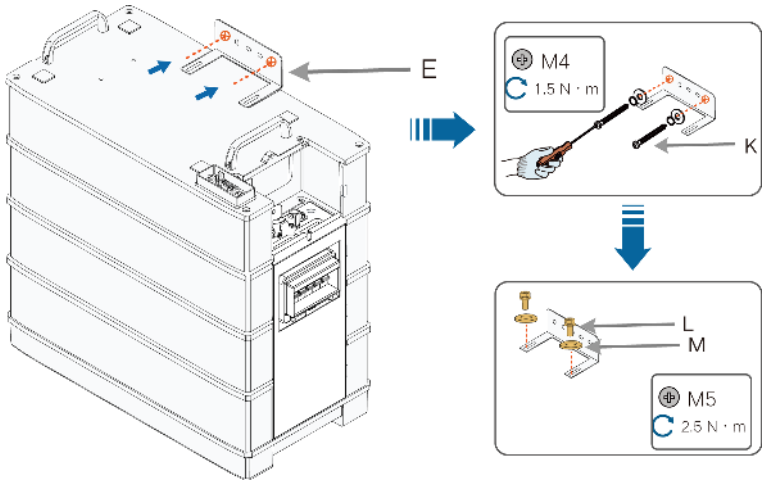

The bracket is mounted on the top battery module.

step 10 Connect the harness.

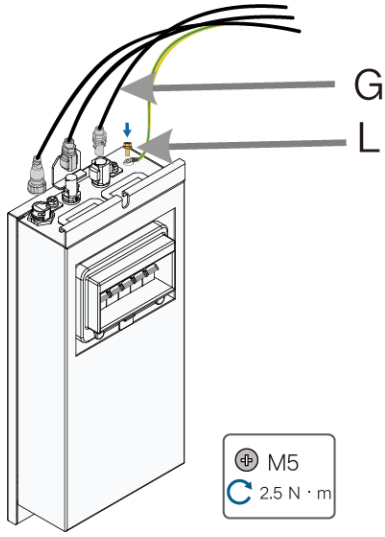

For communication between the battery and the inverter. Connect the communication cable from the "COMM" terminal of the battery to the inverter. Strip the insulation layer of the communication cable with a wire stripper, and lead the corresponding CAN1_H/CAN1_L signal cable out. Cut off the redundant signal cable and warp it with a heat-shrink tubing. Signal cable 1 white and orange cable is used as CAN1_H; and signal cable 2 orange cable is used as CAN1_L.

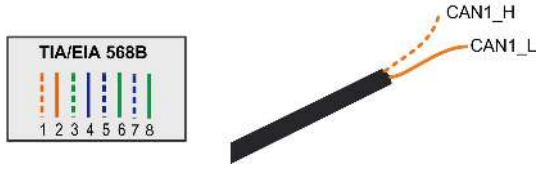

step 11 Place the top cover and fix it with the screw provided.

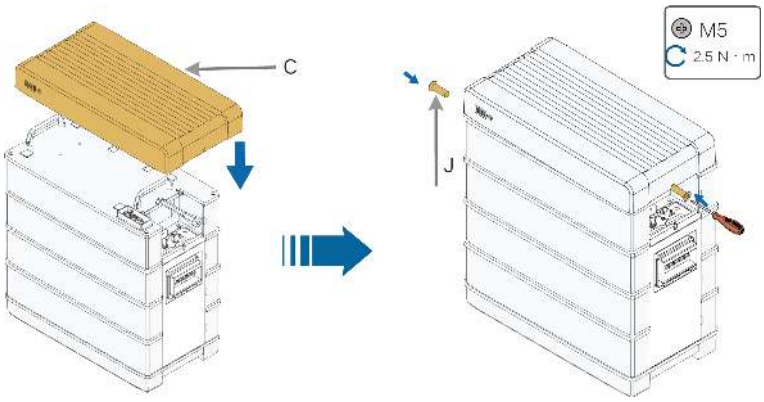

step 12 (Optional) Install the side covers.

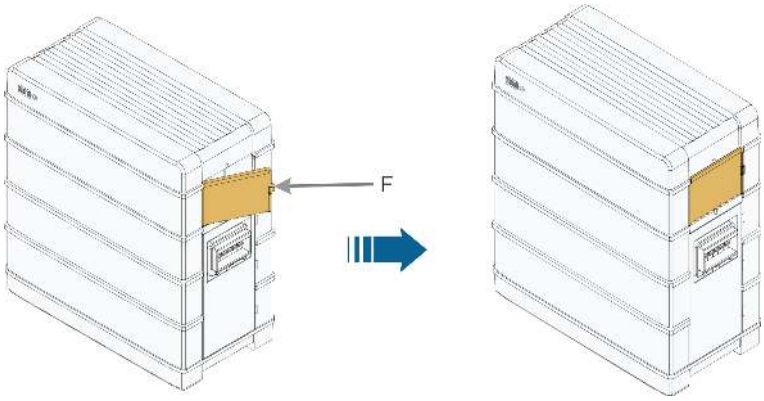

When 4 or more than 4 battery modules are installed in one base, side covers are required.

- - **End**

5 Parallel System（Optional）

The battery can be expanded to 4 units in parallel at most. Available in Q3, 2021.

5.1 Scope of Delivery

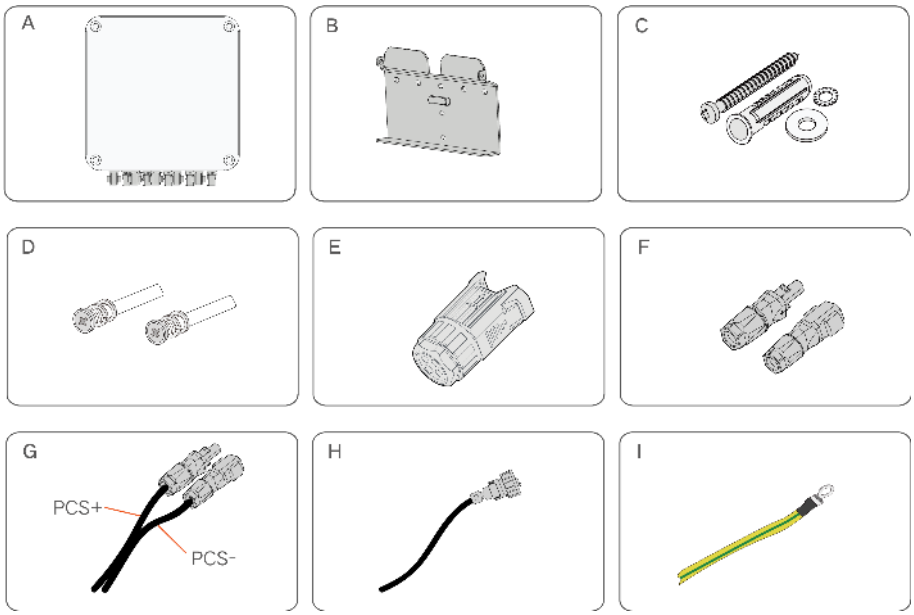

Item	Name	Quantity
A	Junction box	1
B	Bracket	1
C	Expansion plug set	3
D	M4 screw set	2
E	COMM IN connector	1
F	SUNCLIX connector	4
G	SUNCLIX power cables	1
H	COMM OUT communication cable	1
I	Grounding cable	1

5.2 Mounting the Junction Box

step 1 Install the wall-mounting bracket and mount the junction box to the bracket.

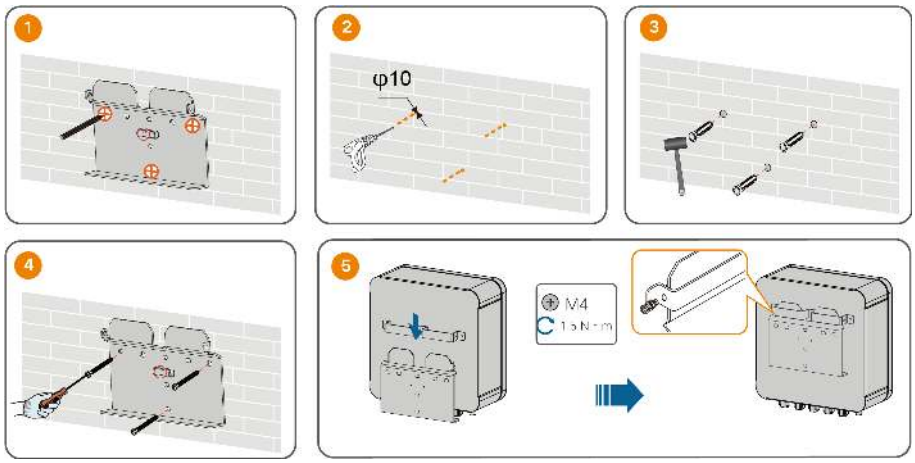

- - End

5.3 Terminal Description (Junction Box)

All electrical terminals are located at the bottom of the junction box.

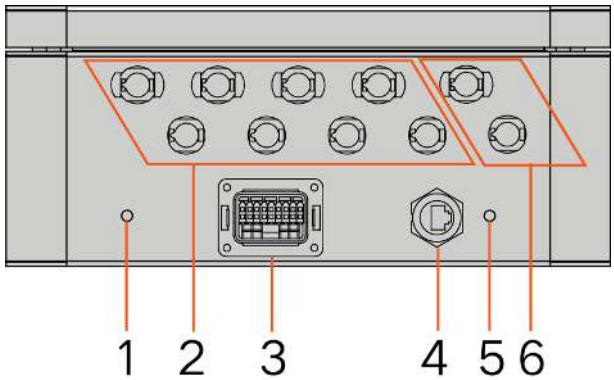

figure 5-1 Terminals at the Bottom of the Junction Box

* The image shown here is for reference only. The actual product received may differ.

table 5-1 The label description of Junction Box terminal

No.	Label	Description
1	GND	Connected to the battery grounding terminal
2	BAT1+, BAT1 − BAT2+, BAT2 − BAT3+, BAT3 − BAT4+, BAT4 −	BAT+ terminals, connected to the battery P+ terminal BAT − terminals, connected to the battery P − terminal
3	COMM IN	Communication terminal, connected to the battery COMM terminal
4	COMM OUT	Communication terminal, connected to the inverter communication terminal

No.	Label	Description
5	GND	Connected to the ground
6	PCS+, PCS-	PCS+ terminal, connected to the inverter positive terminal PCS－ terminal, connected to the inverter negative terminal

table 5-2 The label of COMM IN terminal

L1	L2	L1	L2	L1	L2	L1	L2	A
H1	H2	H1	H2	H1	H2	H1	H2	B
BMS1/CAN		BMS2/CAN		BMS3/CAN		BMS4/CAN		RS485

table 5-3 The label description of COM terminal

No.	Label	Description
1	BMS1/CAN (L1, L2, H1, H2) BMS2/CAN (L1, L2, H1, H2) BMS3/CAN (L1, L2, H1, H2) BMS4/CAN (L1, L2, H1, H2)	Connected to the battery COMM terminal.
2	RS485 (A, B)	Connected to the BMS, functionally reserved.

5.4 Connection Diagram in Parallel System

Maximum four batteries can be connected in parallel.

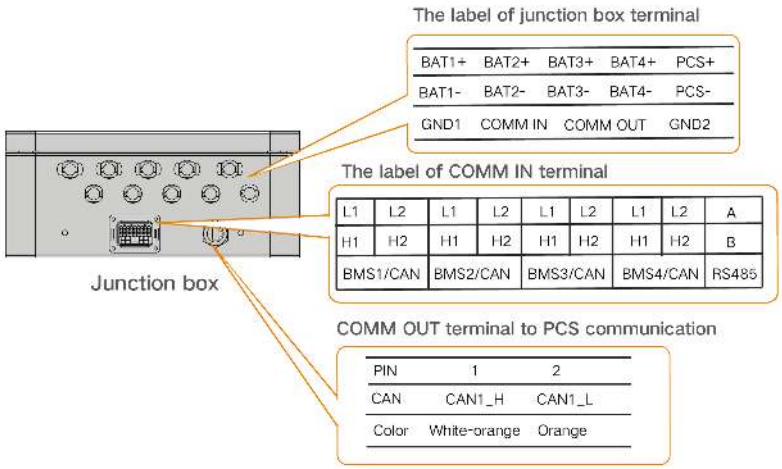

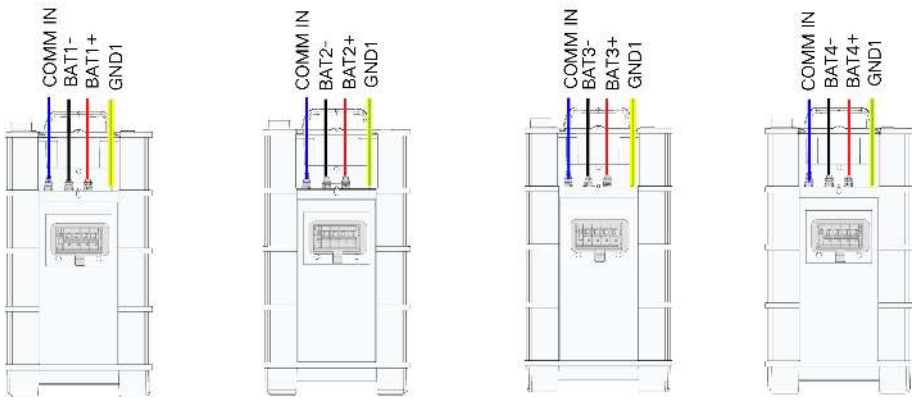

- The COMM terminal of the battery is connected to the COMM IN terminal of the junction box.Signal cable 1 white and orange cable is used as BMS/CAN_H1; signal cable 2 orange cable is used as BMS/CAN_L1; signal cable 5 white and blue cable is used as BMS/CAN_H2; and signal cable 6 green cable is used as BMS/CAN_L2.

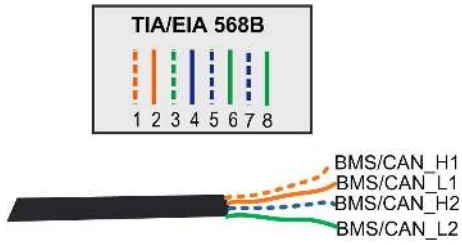

- The grounding terminal of the battery is connected to the grounding terminal on the left side of the junction box.
- The COMM OUT terminal of the junction box is connected to the inverter.Signal cable 1 white and orange cable is used as CAN1_H; and signal cable 2 orange cable is used as CAN1_L.

5.5 Installing the SUNCLIX Connector

This section mainly describes the cable connections on the junction box side. For the cable connections on the battery side, refer to the section "Installing the battery".

NOTICE

During assembly, be careful not to contaminate, pull out, or shift, the seal in the cable gland. A contaminated or shifted seal impairs strain relief and leak tightness.

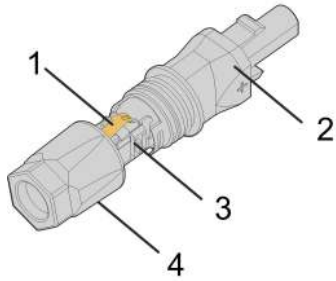

figure 5-2 SUNCLIX Connector Components

1 : Spring 2: Sleeve 3: Insert 4: Cable gland

The BAT3+ and BAT3- terminals are used as examples for description.

step 1 Strip the insulation from the cable by 15 mm.

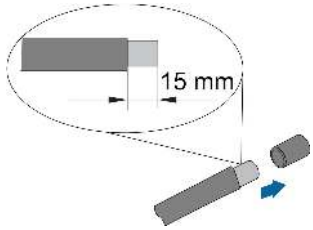

step 2 Pry the connection open and pull the sleeve and the insert apart.

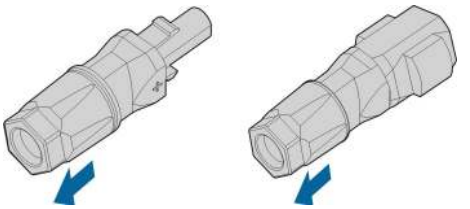

step 3 Insert the stripped cable into the cable gland up to the stop. The stranded wire can be seen inside the spring. Press the spring down until it audibly snaps into place.

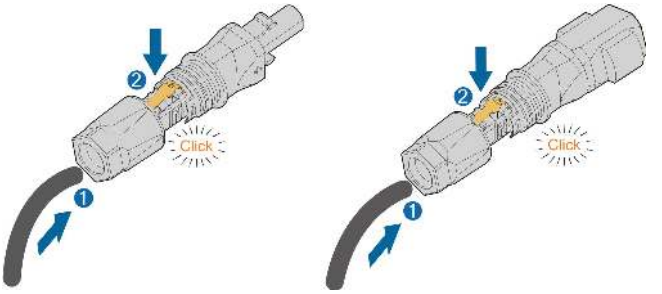

step 4 Push the insert into the sleeve and tighten the cable gland (torque 2 N・m).

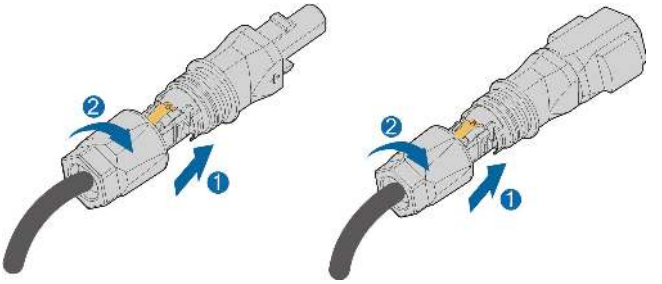

step 5 Remove the waterproof lid from **BAT3+** and **BAT3 −** the terminal.

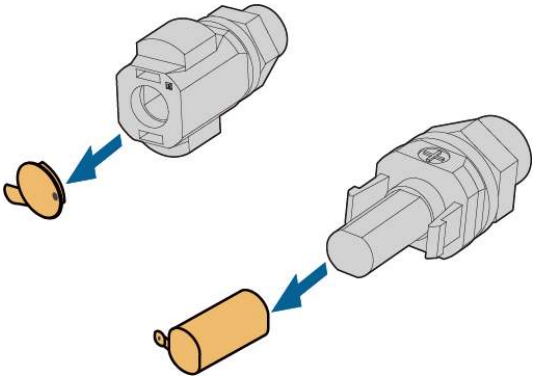

step 6 Plug the connectors into **BAT3+** and **BAT3 −** terminals.

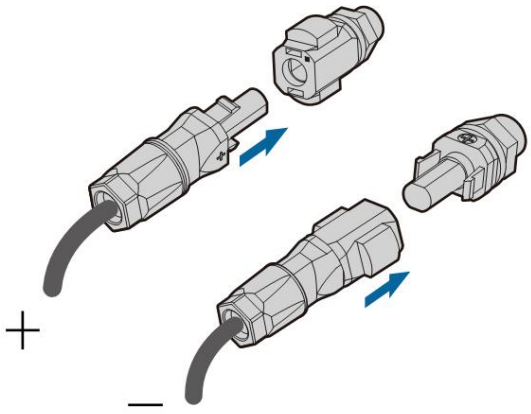

step 7 Ensure that the connectors are securely in place.

- - End

5.6 Installing the COMM IN Connector

This section mainly describes the cable connections on the junction box side. For the cable connections on the battery side, refer to the section "Installing the battery".
The BMS3/CAN terminal is used as an example for description.

step 1 Unscrew the swivel nut from the connector.

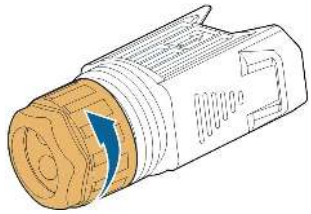

step 2 Take out the terminal block.

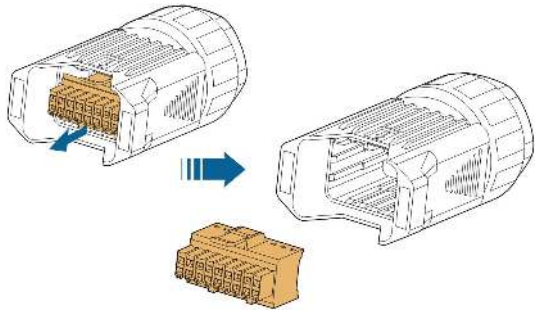

step 3 Remove the seal and lead the cable through the cable gland.

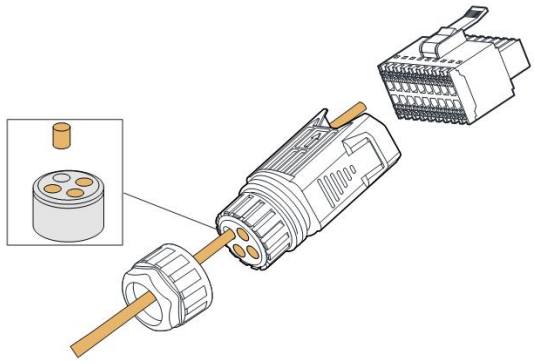

step 4 Remove the cable jacket by 7 mm to 10 mm from the cable that is led out from the battery.

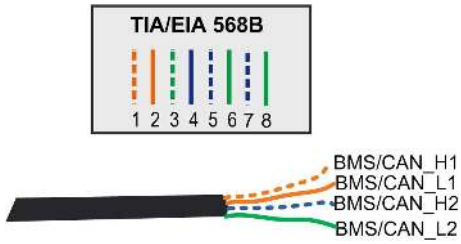

step 5 Plug the wires into the corresponding terminal according the labels on the bottom of the device.

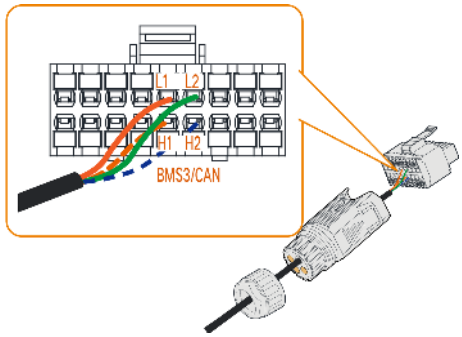

step 6 Pull the wires outward to check whether they are firmly installed.

step 7 Insert the terminal block into the connector until it snaps into place with an audible click.

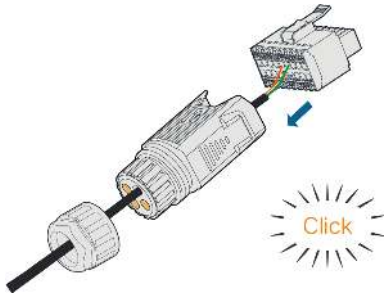

step 8 Fasten the swivel nut.

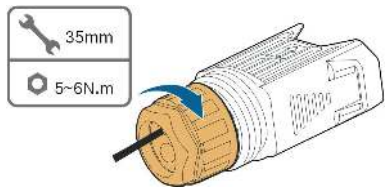

step 9 Remove the waterproof lid from the **COMM IN** terminal.

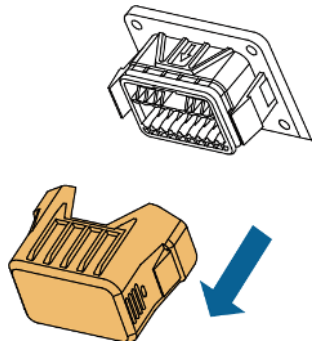

step 10 Insert the COMM IN connector into **COMM IN** terminal on the bottom of the junction box until there is an audible click.

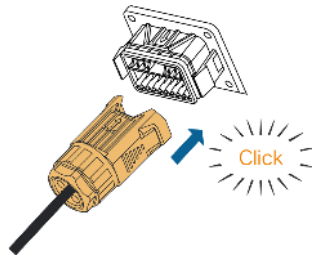

step 11 Pull cables outwards to confirm whether they are fastened firmly.

- - End

6 Commissioning

6.1 Inspection before Commissioning

Check the following items before starting the battery:

- Check that the battery system has been installed completely.
- Check that the appearance of the battery system is intact.
- Check that the battery system output wiring harness is correctly connected to the positive and negative terminals of the battery and inverter to avoid misconnection and reverse connection.

6.2 Commissioning Procedure

If all of the items mentioned above meet the requirements, proceed as follows to start up the battery for the first time.

step 1 Connect all the switches on the AC and DC sides of the PCS.

step 2 Manually connect the DC breaker on the right side of the battery so that the BMS enters the self-test state. The status indicator blinks in blue. Ten seconds later, press and hold the status indicator for less than 2 seconds. Wait until the indicator is steady on in blue, which indicates that the battery system is powered on and runs normally.

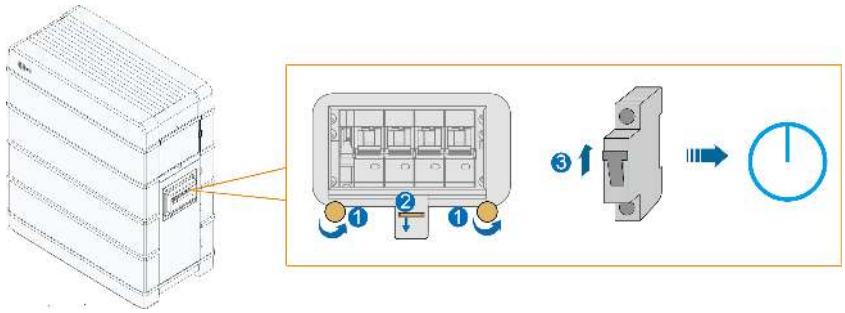

- - End

WARNING

During commissioning, if there is a short-circuit fault in the battery system, disconnect the power cable between the switch gear and the inverter, check the battery system wiring, and eliminate the short-circuit fault point. Execute step 2, check whether there is a fault in the battery (the indicator light is red), and obtain fault information through iSolarCloud to contact SUNGROW to repair the battery system.

7 Decommissioning the Battery

Decommission the battery in the system after the inverter is decommissioned. Proceed as follows to decommission the battery.

step 1 Press and hold the power button for 5 seconds until the DC breaker on the right side of the battery is disconnected.

step 2 One minute after the DC breaker is disconnected, disconnect all cables between the battery and other devices.

- - End

Contact SUNGROW to dispose of the battery.

8 Troubleshooting and Maintenance

8.1 Troubleshooting

No.	Alarm Name	Common Cause	Corrective Measures
1	Overtemperature alarm	The temperature inside the module is too high. The operating ambient temperature is too high.	Generally, the battery module will recover and resume operation after its temperature becomes normal. If the fault repeatedly occurs: 1. Check whether the ambient temperature of the battery module is too high. 2. Check whether the battery module is placed in a well-ventilated place. 3. Check whether the battery module is exposed to direct sunlight. Shield the battery module if it is under direct sunlight. 4. Check whether the fan is running properly. Replace the fan if it is not working properly. 5. Contact SUNGROW if the preceding causes are ruled out and the fault persists.
2	Low temperature alarm	It is detected that the ambient temperature is lower than the threshold.	Shut down and disconnect the lithium-ion battery system. Restart the battery system only after the ambient temperature rises to the normal operating temperature range.
3	Overvoltage alarm	The alarm is generated due to a minor exception of the battery itself, operating environment, or operations on the battery.	Generally, the battery can recover automatically. If the alarm persists for a long time: 1. The overvoltage alarm is related to the system operating status. If this alarm is generated, check whether the system is being charged. If yes, shut down the system. 2. If the fault persists or repeatedly occurs, contact SUNGROW.

No.	Alarm Name	Common Cause	Corrective Measures
4	Undervoltage alarm	The alarm is generated due to a battery fault caused by the battery itself, operating environment, or operations on the battery.	Generally, the battery can recover automatically. If the alarm persists for a long time: 1. The undervoltage alarm is related to the system operating status. If this alarm is generated, check whether the system is being discharged. If yes, shut down the system. 2. If the fault persists or repeatedly occurs, contact SUNGROW.
5	Charge/discharge overcurrent alarm		Generally, the battery can recover automatically. If the alarm persists for a long time: 1. The charge/discharge overcurrent alarm is related to the system operating status. If this alarm is generated, start the App to check whether the system operating current is beyond the rated value. If yes, shut down the system. 2. If the fault persists or repeatedly occurs, contact SUNGROW.
6	Battery voltage imbalance		Generally, the battery can recover automatically. If the alarm persists for a long time: 1. Disconnect the AC output switch and DC input switch of the inverter, as well as the circuit breaker of the battery system. 2. Check whether the power cable of the system is properly connected. 3. Contact SUNGROW if the preceding causes are ruled out and the fault persists.

No.	Alarm Name	Common Cause	Corrective Measures
7	BMS internal alarm	The communication cable between the battery and the inverter is disconnected, or the communication terminal of the battery or the inverter is in poor contact.	1. Disconnect the AC output switch and DC input switch of the inverter, as well as the circuit breaker of the battery system. 2. Check whether the communication cable and its terminals are faulty. If yes, rectify the fault to ensure its reliable connection. 3. Check whether the battery system is powered on normally. If yes, the power indicator should be on in blue. 4. Contact SUNGROW if the preceding causes are ruled out and the fault persists.
8	Overtemperature protection	The alarm is generated due to a battery fault caused by the battery itself, operating environment, or operations on the battery.	Generally, if the battery system is faulty, the battery management system will actively disconnect the internal contactor to avoid escalation of the fault. 1. If the battery temperature is too high, take measures such as improving heat dissipation to lower the temperature. After the temperature drops to the normal operating temperature range of the system, restart the battery system. 2. If the fault causes tripping of the external circuit breaker, wait until the temperature drops to the normal operating temperature range of the system, and then connect the circuit breaker. 3. If the fault persists, contact SUNGROW.
9	Low temperature protection		Shut down and disconnect the lithium-ion battery system. Restart the battery system only after the ambient temperature rises to the normal operating temperature range.

No.	Alarm Name	Common Cause	Corrective Measures
10	Charge/ discharge overcurre-nt protection		Generally, if the battery system is faulty, the battery management system will actively disconnect the internal contactor to avoid escalation of the fault. 1. If the fault is rectified, restart the system and check the operating status of the system. 2. If the fault causes tripping of the external circuit breaker and such tripping occurs for the first time, connect the circuit breaker. 3. If the fault persists, contact SUNGROW.
11	Battery internal hardware failure	The alarm is generated due to a battery fault caused by the battery itself, operating environment, or operations on the battery. Such as short circuiting of the battery system due to misuse.	Generally, if the battery system is faulty, the battery management system will actively disconnect the internal contactor to avoid escalation of the fault. 1. Disconnect the AC output switch and DC input switch of the inverter, as well as the circuit breaker of the battery system. 2. If the battery system is short-circuited by mistake, you should check whether the total voltage of the battery stack is normal and whether the system reports the fault. The common failure device for this fault is the internal contactor, which needs to be replaced by contacting SUNGROW. 3. Contact SUNGROW.
12	Overvolta-ge protection	The alarm is generated due to a battery fault caused by the battery itself, operating environment, or operations on the battery.	Generally, if the battery system is faulty, the battery management system will actively disconnect the internal contactor to avoid escalation of the fault. 1. Disconnect the AC output switch and DC input switch of the inverter, as well as the circuit breaker of the battery system. 2. Contact SUNGROW.
13	Low voltage protection		

8.2 Maintenance

Below is the recommended maintenance cycle. The actual maintenance cycle should be adjusted according to the specific installation environment of this product.

The power station scale, installation location and on-site environment affect the maintenance cycle of this product. In sandy or dusty environments, it is necessary to shorten the maintenance cycle and increase the frequency of maintenance.

Maintenance performed once a year

Inspection item	Inspection method
Battery module status and cleanliness	Check the following items. In case of nonconformity, take corrective actions immediately: • Check the battery module and internal devices for damage or deformation. • Check the internal devices for abnormal noise during operation. • Check whether the temperature inside the battery cluster is too high. • Check whether the internal humidity and dust of the battery module are within the normal ranges. If necessary, clean the battery module.
Warning sign	Check whether the warning sign and label are legible and dirty. If necessary, clean them.
Wire and cable	Check whether the switch gear and PCS are connected correctly .
Corrosion	Check the battery module for internal oxidation or rust.

Maintenance performed once every six months

Inspection item	Inspection method
Switch gear and battery module	Check the following items. In case of nonconformity, take corrective actions immediately: • Check whether there are flammable objects around the battery module. • Check whether the battery module is reliably fixed on the wall, and whether any fixing point is corroded. • Check the switch gear and battery module for damage, paint peeling, oxidation, etc.
Wire and cable layout	The inspection must not be carried out until all internal devices of the battery module are powered off! In case of nonconformity found in inspection, take corrective actions immediately: • Check the cable layout for short circuit and compliance with the specifications. If case of any abnormality, take corrective actions immediately. • Check the battery module for internal seepage of water. • Check whether the cables are loose, and tighten them according to the aforesaid torque.
Grounding	Check whether the grounding is correct.
Function inspection	Check whether the current, voltage and temperature in the operation record of the battery module are within the operating ranges.

Note: The battery has the function of automatic capacity calibration, which is supported only by the Sungrow PCS system.

9 Appendix

9.1 Technical Data

Parameters	SBR096	SBR128	SBR160
System Data			
Battery Type		LiFePO4 Prismatic Cell	
Battery Module		3.2 kWh, 33 kg	
Nominal Capacity	9.6 kWh	12.8 kWh	16 kWh
Energy (-usable) [1]	9.6 kWh	12.8 kWh	16 kWh
Nominal voltage	192 V	256 V	320 V
Operating voltage	150 V – 219 V	200 V – 292 V	250 V – 365 V
Rated DC power	5.76 kW	7.68 kW	9.6 kW
Max. charge/ discharge power	6.57 kW	8.76 kW	10.95 kW
Max. charging / discharging current: continuous		30 A	
Max. charging / discharging current: 10s pulse		42 A	
Depth of Discharge		100%	
Short circuit current		1700 A	
Display		SOC indicator,Status indicator	
Communicati-on interface		CAN	
Protection			

Parameters	SBR096	SBR128	SBR160
Over / under voltage protection		Yes	
Over current protection		Yes	
Over / under temperature protection		Yes	
DC breaker		Yes	
General Data			
Dimensions (W*H*D)	625 * 545 * 330 mm	625 * 675 * 330 mm	625 * 805 * 330 mm
Weight	114 kg	147 kg	180 kg
Installation location		Indoor / Outdoor	
Mounting method		Floor stand	
Operating temperature		Charge: 0 to 50 ℃ Discharge: -30 to 50 ℃	
Degree of protection		IP55	
Allowable relative humidity range		0 – 95% (non-condensing)	
Max. operating altitude		2000 m	
Cooling method		Natural convection	
Warranty[2]		10 Years	
Expansion adaptation[3]		Up to 4 units in parallel（need extra Junction box）	

1: Test conditions: 25℃,100% depth of discharge (DOD), 0.2C charge and discharg

2: Refer to battery warranty card for conditional application.

3: Available in Q3, 2021

Parameters	SBR192	SBR224	SBR256
System Data			
Battery Type		LiFePO4 Prismatic Cell	
Battery Module		3.2 kWh, 33 kg	
Nominal Capacity	19.2 kWh	22.4 kWh	25.6 kWh
Energy (usable)[1]	19.2 kWh	22.4 kWh	25.6 kWh

Parameters	SBR192	SBR224	SBR256
Nominal voltage	384 V	448 V	512 V
Operating voltage	300 V – 438 V	350 V – 511 V	400 V – 584 V
Rated DC power	11.52 kW	13.44 kW	15.36 kW
Max. charge/ discharge power	13.14 kW	15.33 kW	17.52 kW
Max. charging / discharging current: continuous	30 A		
Max. charging / discharging current: 10s pulse	42 A		
Depth of Discharge	100%		
Short circuit current	1700 A		
Display	SOC indicator,Status indicator		
Communication interface	CAN		
Protection			
Over / under voltage protection	Yes		
Over current protection	Yes		
Over / under temperature protection	Yes		
DC breaker	Yes		
General Data			
Dimensions (W*H*D)	625 * 935 * 330 mm	625 * 1065 * 330 mm	625 * 1195 * 330 mm
Weight	213 kg	246 kg	279 kg
Installation location	Indoor / Outdoor		
Mounting method	Floor stand		
Operating temperature	Charge: 0 to 50 ℃ Discharge: -30 to 50 ℃		
Degree of protection	IP55		
Allowable relative humidity range	0 – 95% (non-condensing)		
Max. operating altitude	2000 m		
Cooling method	Natural convection		

Parameters	SBR192	SBR224	SBR256
Warranty[2]		10 Years	
Expansion adaptation[3]	Up to 4 units in parallel（need extra Junction box）		

1: Test conditions: 25℃,100% depth of discharge (DOD), 0.2C charge and discharg

2: Refer to battery warranty card for conditional application.

3: Available in Q3, 2021

9.2 Quality Assurance

When product faults occur during the warranty period, SUNGROW will provide free service or replace the product with a new one.

Evidence

During the warranty period, the customer shall provide the product purchase invoice and date. In addition, the trademark on the product shall be undamaged and legible. Otherwise, SUNGROW has the right to refuse to honor the quality guarantee.

Conditions

- After replacement, unqualified products shall be processed by SUNGROW.
- The customer shall give SUNGROW a reasonable period to repair the faulty device.

Exclusion of Liability

In the following circumstances, SUNGROW has the right to refuse to honor the quality guarantee:

- The free warranty period for the whole machine/components has expired.
- The device is damaged during transport.
- The device is incorrectly installed, refitted, or used.
- The device operates in harsh environment, as described in this manual.
- The fault or damage is caused by installation, repairs, modification, or disassembly performed by a service provider or personnel not from SUNGROW.
- The fault or damage is caused by the use of non-standard or non-SUNGROW components or software.
- The installation and use range are beyond stipulations of relevant international standards.
- The damage is caused by unexpected natural factors.

For faulty products in any of above cases, if the customer requests maintenance, paid maintenance service may be provided based on the judgment of SUNGROW.

9.3 Contact Information

Should you have any question about this product, please contact us.
We need the following information to provide you the best assistance:

- Model of the device
- Serial number of the device
- Fault code/name
- Brief description of the problem

China (HQ) Sungrow Power Supply Co., Ltd Hefei +86 551 65327834 service@sungrowpower.com	**Australia** Sungrow Australia Group Pty. Ltd. Sydney +61 2 9922 1522 service@sungrowpower.com.au
Brazil Sungrow Do Brasil Sao Paulo +55 0800 677 6000 latam.service@sungrowamericas.com	**France** Sungrow France Lyon +33420102107 service@sungrow-emea.com
Germany, Austria, Switzerland Sungrow Deutschland GmbH Munich +49 0800 4327 9289 service@sungrow-emea.com	**Greece** Service Partner – Survey Digital +30 2106044212 service@sungrow-emea.com
India Sungrow (India) Private Limited Gurgaon +91 080 41201350 service@in.sungrowpower.com	**Italy** Sungrow Italy Verona +39 0800 974739 (Residential) +39 045 4752117 (Others) service@sungrow-emea.com
Japan Sungrow Japan K.K. Tokyo + 81 3 6262 9917 service@jp.sungrowpower.com	**Korea** Sungrow Power Korea Limited Seoul +82 70 7719 1889 service@kr.sungrowpower.com

Malaysia Sungrow SEA Selangor Darul Ehsan +60 19 897 3360 service@my.sungrowpower.com	**Philippines** Sungrow Power Supply Co., Ltd Mandaluyong City +63 9173022769 service@ph.sungrowpower.com
Thailand Sungrow Thailand Co., Ltd. Bangkok +66 891246053 service@th.sungrowpower.com	**Spain** Sungrow Ib é rica S.A.U. Mutilva +34 948 05 22 04 service@sungrow-emea.com
Romania Service Partner - Elerex +40 241762250 service@sungrow-emea.com	**Turkey** Sungrow Deutschland GmbH Turkey Istanbul +90 216 663 61 80 service@sungrow-emea.com
UK Sungrow Power UK Ltd. Milton Keynes +44 (0) 01908 414127 service@sungrow-emea.com	**U.S.A, Mexico** Sungrow USA Corporation Phoenix +1 833 747 6937 techsupport@sungrow-na.com
Vietnam Sungrow Vietnam Hanoi +84 918 402 140 service@vn.sungrowpower.com	**Belgium, Netherlands and Luxembourg (Benelus)** +31 08000227012 (only for Netherlands) service@sungrow-emea.com
Poland +48 221530484 service@sungrow-emea.com	-

SUNGROW

Sungrow Power Supply Co., Ltd.

Add: No.1699 Xiyou Rd.,New & High Technology Industrial Development Zone, 230088,Hefei, P. R. China.
Web: www.sungrowpower.com E-mail: info@sungrow.cn Tel: +86 551 6532 7834 / 6532 7845

Specifications are subject to changes without advance notice.