SolaX Power Network Technology (Zhejiang) Co., Ltd.

ADD.: No. 278, Shizhu Road, Chengnan Sub-district, Tonglu County, Hangzhou, Zhejiang, China

E-mail: info@solaxpower.com

Copyright © SolaX Power Network Technology (Zhejiang) Co., Ltd. All rights reserved.

320101034411

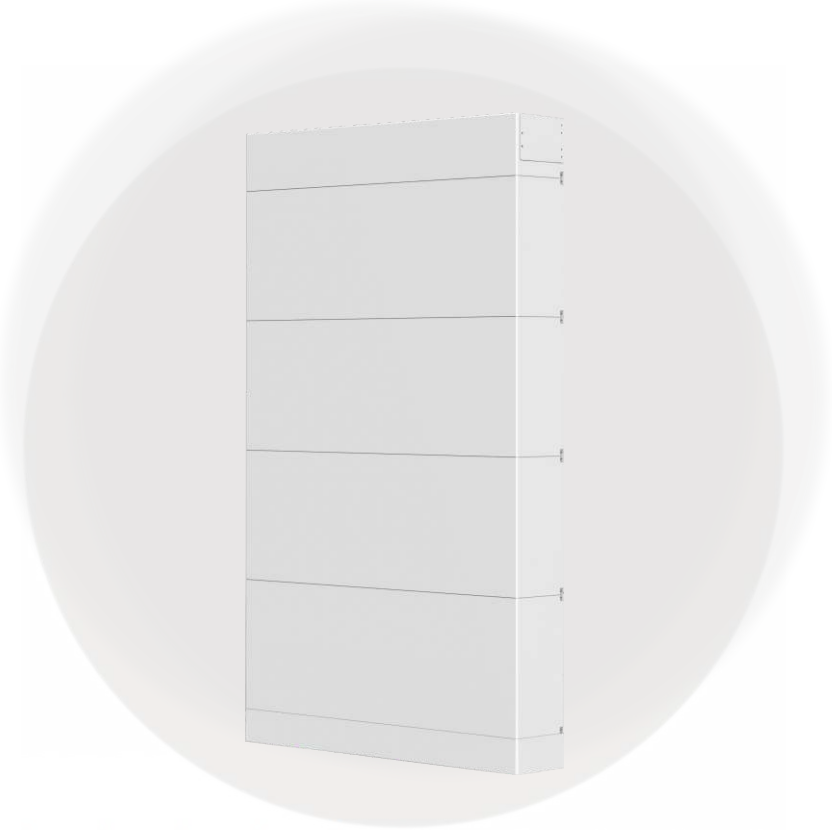

Triple Power Lithium-ion Battery

100 Ah
User Manual

Version 11.0

www.solaxpower.com

eManual in the QR code or at http://kb.solaxpower.com/

CHANGE HISTORY

Changes between document versions are cumulative. The latest version contains all updates made in previous versions.

Version 11 (Aug 5, 2024)

Updated Chapter 11 Disclaimer (Deleted description related to the warranty period)

Version 10 (Jun 21, 2024)

Updated 2.1.1 General Safety Precautions (Deleted Do not expose the battery module to direct sunlight.)

Version 09 (May 9, 2024)

- Changed the front and back covers of the manual;
- Updated 3. 1 Dimensions and Weight, 3.2.2 Certifications and 3.4 Specifications (Updated some technical data).
- Updated 4. 3 Tools (Updated the images of torch wrench and screwdriver, and added flat-head screwdriver)
- Updated 4. 4. 3 Accessory (Added number for accessories)
- Updated 5 Installation (Added the renderings of the two battery installation modes, modify the torch of certain steps, and revise some content)
- Updated 5.4 Wall Mounting (Added requirements for the height of BMS breaker from the ground)
- Updated 9.1 Dismantling the Battery (Change the BAT+ and BAT- cable diagrams, and added steps for unplugging these cables)
- Modified the company address on the back cover

Version 08 (Sep. 14, 2023)

Updated 5 Installment (added the installation information about the solid wood wall and torque)

Version 07 (Aug. 3, 2023)

- Updated 2 Safety (Change of the CSA icon)
- Updated 3.4 Specifications (Modified the storage temperature)

Version 06 (Jun. 6, 2023)

Updated 4.4.3 Accessory (Change of wall bracket);

Version 05 (Nov. 17, 2022)

Updated 3.4 Specifications (Modified the value of Max. Power)

Version 04 (Nov. 1, 2022)

Updated 7.2 Status Indicators (Modified the info about indicators)

Version 03 (Aug. 10, 2022)

- Updated 4.4.3 Accessory (Changed to physical diagram);
- Updated 5 Installation (Changed the torque of M5*10 screw, and added instruction while installing the device on the wood wall);
- Updated 11 Disclaimer (Added "WARNING").

Version 02 (Mar. 10, 2022)

- Updated 3.4 Specifications (Modified the info of "Nominal Energy");
- Updated 4.4.3 Accessory (Changed the figure of BMS and Transverse Plate;
- Updated 8 Troubleshooting (Modified troubleshooting).

Version 01 (Feb. 11, 2022)

- Updated 3.4 Specifications (Added info about Charge/DischargeTemperature);
- Updated 4.4.3 Accessory (Change figure and quantity);
- Updated 3.2.2 Certification (Added UL9540)

Version 00 (Oct. 25, 2021)

Initial release

Contents

1 Note on This Manual . . . 1
1.1 Scope of Validity . . . 1
1.2 Target Group . . . 1
1.3 Symbols . . . 1
2 Safety . . . 2
2.1 Safety Instructions . . . 2
2.1.1 General Safety Precautions . . . 2
2.1.2 Explanation of Symbols . . . 3
2.2 Response to Emergency Situations . . . 4
2.2.1 Leaking Batteries . . . 4
2.2.2 Fire . . . 4
2.2.3 Wet Batteries and Damaged Batteries . . . 4
2.3 Qualified Installer . . . 5
3 Product Information . . . 6
3.1 Dimensions and Weight . . . 6
3.2 Appearance . . . 7
3.3 Basic Features . . . 9
3.2.1 Features . . . 9
3.2.2 Certifications . . . 9
3.4 Specifications . . . 10
3.4.1 T-BAT SYS-HV Configuration List . . . 10
3.4.2 Performance . . . 10
4 Preparation Before Installation . . . 11
4.1 Prerequisites . . . 11
4.2 Safety Gear . . . 12
4.3 Tools . . . 12
4.4 Inspection . . . 13
4.4.1 Check for Transport Damage . . . 13
4.4.2 Unpacking . . . 13
4.4.3 Accessories . . . 14
5 Installation . . . 17
5.1 Installation Environment Requirements . . . 17
5.2 Installation Mode . . . 17
5.3 Floor Mounting . . . 19
5.3.1 Overview . . . 19
5.3.2 Step . . . 22
5.4 Wall Mounting . . . 30
5.4.1 Overview . . . 30
5.4.2 Step . . . 33
5.5 Steps for Increasing Battery Capacity . . . 42

6 Wiring 43
7 Commissioning 45
7.1 Commissioning 45
7.2 Status Indicators 46
7.2.1 BMS (TBMS-MCS60060) 46
7.3 Shutting Down T-BAT System 48
8 Troubleshooting 49
8.1 Troubleshooting 49
9 Decommissioning 53
9.1 Dismantling the Battery 53
9.2 Packing 54
10 Maintenance 55
11 Disclaimer 56
* WARRANTY REGISTRATION FORM

1 Note on This Manual

1.1 Scope of Validity

This manual is an integral part of the T-BAT Series. It describes the assembly, installation, commissioning, maintenance and failure of the product. Read it carefully prior to operation.

T-BAT-SYS-HV-5.0 BMS
TBMS-MCS60060

T-BAT-SYS-HV-5.0 Module
TP-HS50

Note: There are 3 models of T-BAT system, which includes the BMS, battery module(s) and base. Refer to section 3.3.1 T-BAT-SYS-HV Configuration List on Page 11 for detailed models.

1.2 Target Group

This manual is for qualified electricians. The tasks described in this manual may only be performed by qualified electricians.

1.3 Symbols

The following types of safety instructions appear in this document and are described below:

DANGER!
“DANGER” indicates a hazardous situation which, if not avoided, will result in serious injury or death.

WARNING!
“WARNING” indicates a hazardous situation which, if not avoided, could result in serious injury or death.

CAUTION!
“CAUTION” indicates a hazardous situation which, if not avoided, could result in minor or moderate injury.

NOTE!
“NOTE” provides tips that are valuable for the optimal operation of your product.

2 Safety

2.1 Safety Instructions

For safety reasons, installers are responsible for familiarizing themselves with the contents of this manual and all warnings before performing installation.

2.1.1 General Safety Precautions

> WARNING!
> Do not crush or impact the battery, and always dispose of it according to safety regulations.

Observe the following precautions:

- Risks of explosion:
  - ➔ Do not subject the battery module to heavy impacts.
  - ➔ Do not crush or puncture the battery module.
  - ➔ Do not dispose of the battery module in a fire.
- Risks of fire:
  - ➔ Do not expose the battery module to temperatures in excess of 140°F (60°C).
  - ➔ Do not place the battery module near a heat source, such as a fireplace.
  - ➔ Do not allow the battery connectors to touch conductive objects such as wires.
- Risks of electric shock:
  - ➔ Do not disassemble the battery module.
  - ➔ Do not touch the battery module with wet hands.
  - ➔ Do not expose the battery module to moisture or liquids.
  - ➔ Keep the battery module away from children and animals.
- Risks of damage to the battery module:
  - ➔ Do not expose the battery module to liquids.
  - ➔ Do not subject the battery module to high pressures.
  - ➔ Do not place any objects on top of the battery module.

T-BAT SYS-HV should only be installed for residential applications and not be for commercial applications.

> CAUTION!
> Non-operational batteries should be discarded according to local regulations.

2.1.2 Explanation of Symbols

Symbol	Explanation
272687	CSA mark for UL1973
	CE mark of conformity
	TUV certification
	The battery system must be disposed of at a proper facility for environmentally-safe recycling.
	Do not dispose of the battery together with household waste.
	Read the enclosed documentation.
	Keep the battery system away from open flames or ignition sources.
	Keep the battery system away from children.
	Caution, risk of electric shock
	Caution, risk of danger
	The battery module may explode.

2.2 Response to Emergency Situations

2.2.1 Leaking Batteries

In case the leakage of electrolyte solution occurs, please avoid direct contact with the electrolyte solution and the gas that may be generated by it. Direct contact may lead to skin irritation or chemical burns. If the user comes into contact with the electrolyte solution, please do as follows:

Accidental inhalation of harmful substances: Evacuate from the contaminated area, and seek medical attention immediately.
Eye contact: Rinse eyes with flowing water for 15 minutes, and seek medical attention immediately.
Dermal contact: Wash the affected area thoroughly with soap and water, and seek medical attention immediately.
Ingestion: Induce vomiting, and seek medical attention immediately.

2.2.2 Fire

Please keep a Class ABC fire extinguisher or a carbon dioxide extinguisher near the equipment.

WARNING!
The battery module may catch fire when heated above 302°F.

If a fire breaks out where the battery module is installed, please do as follows:
1) Extinguish the fire before the battery module catches fire;
2) If the battery module cathes fire, please do not try to put out the fire, and evacuate immediately.

WARNING!
In case of catching fire, the battery module will produce noxious and poisonous gases, and please keep away the battery.

2.2.3 Wet Batteries and Damaged Batteries

Do not touch the battery module after being wet from and soaked in the water.
Do not use the battery module if it is damaged. Otherwise, the loss to life and property will be caused.
Please pack the battery in its original packaging, and return it to SolaX or the distributor.

CAUTION!
Damaged batteries may leak electrolyte or produce flammable gas. If a user suspects that the battery is damaged, please immediately contact SolaX for advice and information.

2.3 Qualified Installer

WARNING!
All operations of T-BAT-SYS-HV relating to electrical connection and installation must be carried out by qualified personnel.

A skilled worker is defined as a trained and qualified electrician or installer who has all of the following skills and experience:

- Knowledge of the functional principles and operation of grid-tied systems;
- Knowledge of the dangers and risks associated with installing and using electrical devices and acceptable mitigation methods;
- Knowledge of the installation of electrical devices;
- Knowledge of and adherence to this manual and all safety precautions and best practices.

3 Product Information

3.1 Dimensions and Weight

A battery management system (BMS) is an electronic system that manages a rechargeable battery.
A battery module is a type of electrical battery which can charge or discharge loads.
The whole system mainly comprises a BMS, a battery module and a base.

	Base	TBMS-MCS60060	TP-HS50
Length	33.5 in./850 mm	33.5 in./850.00 mm	33.5 in./850.00 mm
Width	5.8 in./148.00 mm	5.8 in./148.00 mm	5.8 in./148.00 mm
Height	3.0 in./75.00 mm	5.2 in./133.00 mm	11.8 in./300.00 mm
Weight	9.9 lbs/4.50 kg	22.0 lbs/10.00 kg	118.0 lbs/54.00 kg

BMS
(TBMS-MCS60060)

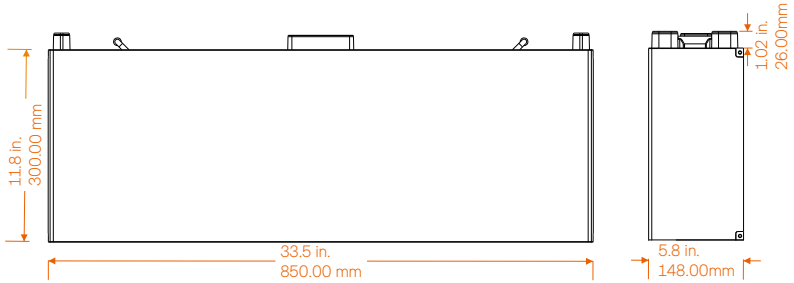

Battery Module
(TP-HS50)

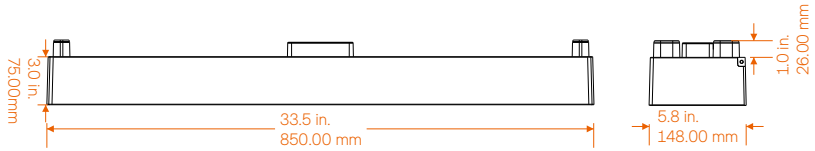

Base

3.2 Appearance

- Section View of BMS

Right

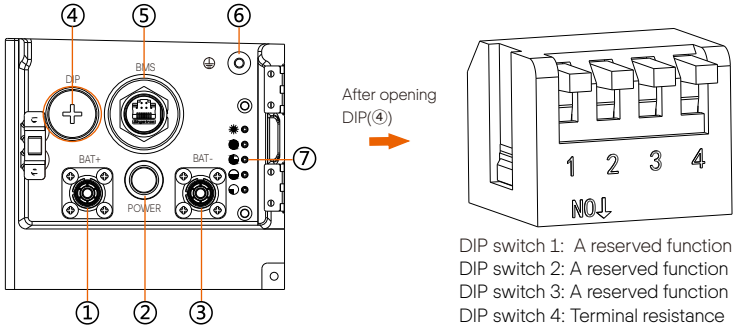

DIP switch 1: A reserved function
DIP switch 2: A reserved function
DIP switch 3: A reserved function
DIP switch 4: Terminal resistance

Item	Description
①	BAT+: Connect BMS's BAT+ to the inverter's BAT+
②	Button: BMS's power button
③	BAT-: Connect BMS's BAT- to the inverter's BAT-
④	DIP: Realize the battery's parallel function (A reserved function)
⑤	BMS: Connect the inverter to BMS's communication
⑥	GND: BMS's GND
⑦	Lamp Panel: Status light and SOC power indicators to display battery status

Left

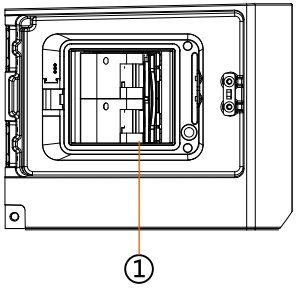

Item	Description
①	Circuit breaker: A switch for battery's input and output

- Section view of battery module

Top

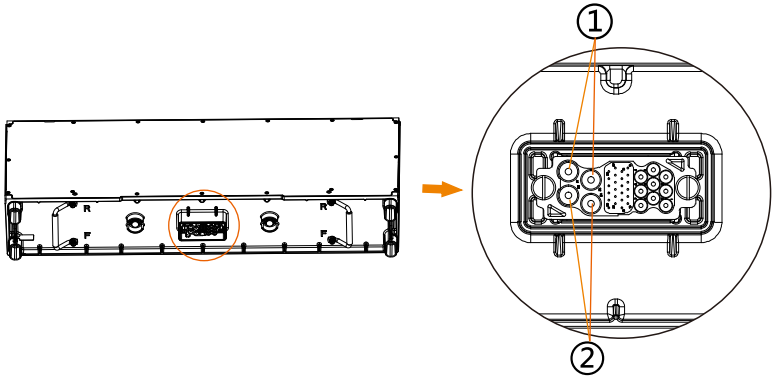

The hot-plug interface is connected to BMS or the bottom of battery	
①	BAT+: Battery's positive output pole (+)
②	BAT-: Battery's negative output pole (-)

Bottom

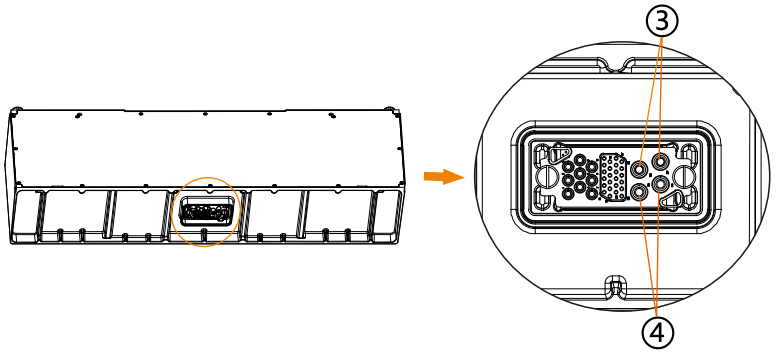

The hot-plug interface is connected to base or the top of battery	
③	Connect the next battery's positive pole or base's shorting stub
④	Connect the next battery's negative pole or base's shorting stub

3.3 Basic Features

3.2.1 Features

The T-BAT-SYS-HV, adopting advanced technology and having the characteristics of high reliability and convenient to control, is one of the most advanced energy storage systems in today's market, with details as below:

- 90% DOD
- 95% Battery Roundtrip Efficiency
- Cycle Life > 6000 Cycles
- Secondary Protection
- IP65 Protection Level
- Safety & Reliability
- Small Occupied Area
- Floor or Wall Mounting

3.2.2 Certification

BAT system safety	UL9540A, UL1973, CE, IEC 62619
UN number	UN 3480
Hazardous materials classification	Class 9
UN transportation testing requirements	UN 38.3
International protection marking	IP65

3.4 Specifications

3.4.1 T-BAT-SYS-HV Configuration List

No.	Model	BMS	Battery Module	Energy(kWh)	Voltage Range(V)
1	T-BAT H 10.0	TBMS-MCS60060×1	TP-HS50 × 2	10	90-116
2	T-BAT H 15.0	TBMS-MCS60060×1	TP-HS50 × 3	15	135-174
3	T-BAT H 20.0	TBMS-MCS60060×1	TP-HS50 × 4	20	180-232

3.4.2 Performance Parameters

Model	T-BAT H 10.0	T-BAT H 15.0	T-BAT H 20.0
Nominal Voltage (Vdc)	102.4	153.6	204.8
Operating Voltage (Vdc)	90-116	135-174	180-232
Nominal Capacity (Ah)①	100	100	100
Nominal Energy (kWh)①	10	15	20
Usable Energy 90% DOD (kWh)②	9	13.5	18
Max. Charge/Discharge Current (A)③	54	54	54
Recommend Charge/Discharge Current (A)	50	50	50
Standard Power (kW)	5.12	7.68	10.24
Max. Power (kW)	5.5	8.3	11.1
Battery Roundtrip Effciency(0.2C, 25°C/77°F)	95%		
Expected Lifetime (25°C/77°F)	10 years		
Cycle Life 90% DOD (25°C/77°F)	6000 cycles		
Charge Temperature	32°F~127.4°F/0°C~53°C ④		
Discharge Temperature	-14°F~127.4°F/-10°C~53°C ④		
Storage Temperature	-4°F~86°F/-20°C~30°C (12 months)		
	86°F~122°F/30°C~50°C (6 months)		
Ingress Protection	IP65		

Note:

① Test conditions: 100% DOD, 0.2C charge & discharge @+ 77°F/25°C.

② 90% DOD; System usable energy may vary with inverter different setting.

③ Discharge: In case of the battery core's temperature range of 14°F~41°F/-10°C~5°C and 113°F~127.4°F/45°C~53°C, the discharge current will be reduced; Charge: In case of the battery core's temperature range of 32°F~68°F/0°C~20°C and 113°F~127.4°F/45°C~53°C, the charge current will be reduced. Product charge or discharge power depends on the actual temperature of the battery pack.

4 Prepration before Installation

4.1 Prerequisites

When assembling the system, avoid touching the battery terminals with any metal object or bare hands. According to the design principles, T-BAT-SYS-HV will provide a safe and reliable energy. Improper operation and equipment damage may cause overheating and electrolyte leakage. Therefore, the above-mentioned safety precautions and warning information mentioned in this part shall be strictly observed. If you have any question, please contact customer service. The “2 Safety” does not contain the provisions of all laws and regulations at the place where the user located.

Before installation, make sure that the installation site meets the following conditions:

- The building can stand up to earthquakes;
- The site shall be over 0.62 miles/997.79 m away from the sea, to avoid damage caused by salt water and humidity;
- The floor shall be flat;
- No inflammable and explosive goods are placed within at least of 3 ft/0.91 m;
- The ambiance shall be shady and cool, away from heat sources and direct sunlight;
- The temperature and humidity remain at a constant level;
- The installation site requires less dust and dirt;
- There are no corrosive gases, including ammonia and acid vapor.

NOTE!
If the ambient temperature exceeds the operating range, the battery pack will stop running to protect itself. The optimal temperature range for running is 59°F/15°C to 86°F/30°C. Frequent exposure to harsh temperatures may deteriorate the performance and lifetime of the battery.

4.2 Safety Gear

Installation and maintenance personnel must strictly comply with the applicable federal, state, and local regulations as well as industry standards on product installation. To avoid short circuit and personal injury, respirator, gloves, goggles and shoes must be worn.

Anti-dust respirator

Insulated Gloves

Safety Goggles

Safety Shoes

4.3 Tools

Please prepare the following tools before installation.

Torque Screw Driver

Phillips-Screw Driver

Hexagon Wrench

Phillips-Head Screw Driver

Torque Wrench

Pencil or Marker

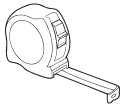
Tape Measure

Drill

Spirit Level

Flat-head Screw Driver (Φ≤4 mm)

4.4 Inspection

4.4.1 Check for Transport Damage

Ensure that the battery has been received in good condition. If there is any damage or obvious defect, please contact the dealer immediately.

4.4.2 Unpacking

Before opening the battery package, remove the packing tape. After opening the package, ensure that the battery modules and relevant accessories are in good condition, and carefully check the quantity and type of accessories are consistent with the “4.4.3 Accessory”. If any accessory is missing, contact SolaX or the distributor immediately.

CAUTION!
According to the local regulations, more than one person is required to carry the equipment.

WARNING!
Strictly follow the installation steps. SolaX will not be responsible for any injury or loss incurred by improper installation and operation.

NOTE!
For the first installation, the interval among manufacture dates of battery modules shall not exceed 3 months.

4.4.3 Accessory

BMS (TBMS-MCS60060):
Hereinafter referred to as “MCS60060”

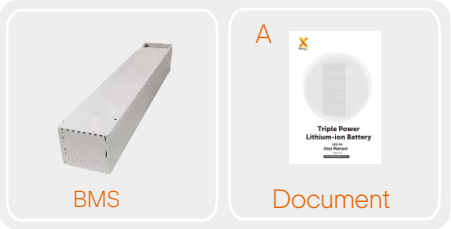

Accessories included are shown as follows:		
Item	Description	Quantity
/	BMS	1
A	Document	/

Battery Module (TP-HS50×1):
Hereinafter referred to as “TP-HS50”

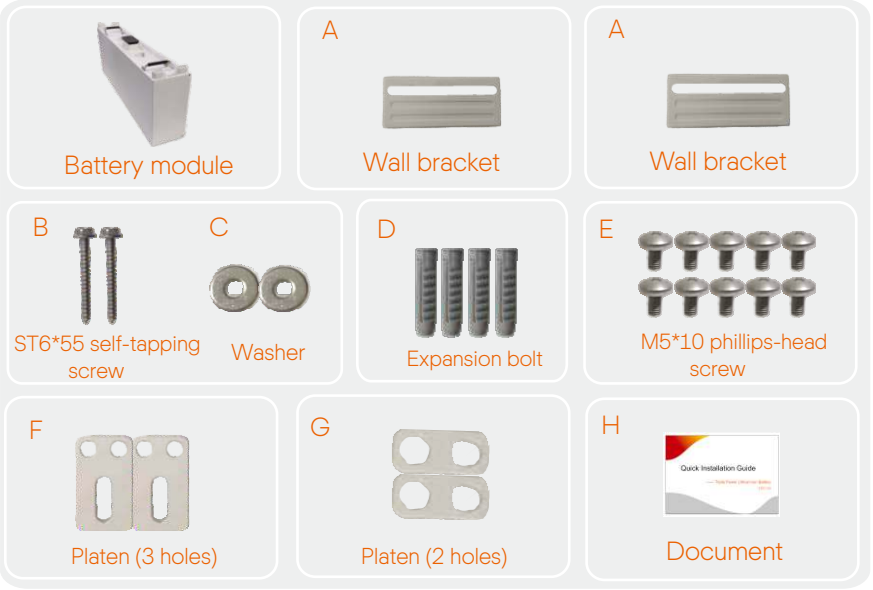

Accessories included are shown as follows:		
Item	Description	Quantity
/	Battery module	1
A	Wall bracket	2*
B	ST6*55 self-tapping screw	2
C	Washer	2
D	Expansion bolt	4
E	M5*10 phillips-head screw	10
F	Platen (3 holes)	2
G	Platen (2 holes)	2
H	Document	/

Note:
*The two wall brackets are separately packaged in the carton.
*The above-mentioned accessories are only for one battery module. SolaX will provide corresponding accessories according to the number of battery modules.

All Accessories Required for Two Installation Modes (T50 Battery)
Hereinafter referred to as “Accessories Required”

Accessories included are shown as follows:		
Item	Description	Quantity
A	M8*85 expansion screw	6
B	M5*8 countersunk screw	4
C	M5*20 countersunk screw	6
D	M8*88 self-tapping screw	6
E	Washer	6
F	Adjustment screw	4
/	Transverse plate	1
/	Base support	2

Note: The above-mentioned accessories are necessities for both floor and wall mounting.

Base for BAT50-G2 Battery:

Accessories included are shown as follows:		
Item	Description	Quantity
/	Base	1

5. Installation

5.1 Installation Environment Requirements

- Ensure that the equipment is installed in a well ventilated environment.
- To prevent fire due to high temperature, ensure that the ventilation vents or heat dissipation system are not blocked when the equipment is running.
- Do not expose the equipment to flammable or explosive gas or smoke. Do not perform any operation on the equipment in such environment.
- A distance of at least 11.81 in./300 mm shall be set aside from the equipment to both left and right sides.
- For both mounting methods, the wall tilt must not exceed 5 degrees.
- In case of Wall Mounting, make sure the wall is strong enough to withstand the weight of battery. In case of wooden wall, it must bear the load of at least 2,204.62 lbs/1,000.00 kg.
- In case of Wall Mounting, do not install on the hollow concrete block wall.

5.2 Installation Mode

There are two alternative installation modes and three schemes available for users. For details, refer to the following table.

	Floor Mounting			Wall Mounting			
	BMS	Battery Module	Base	BMS	Battery Module	Base	Base Support
Scheme A	1	2	1	1	2	1	1
Scheme B	1	3	1	1	3	1	1
Scheme C	1	4	1	1	4	1	1

Note: The equipment supports the following stub spacing: 20, 24, 28 and 32 in.

This manual uses the installation procedure of Scheme C with four battery modules for example. Followings are battery system images of the two installation methods.

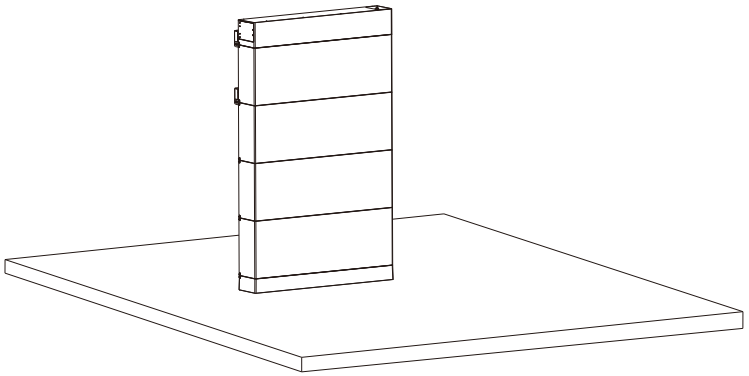

Floor mounting (See Page 19 to 29 for installation details)

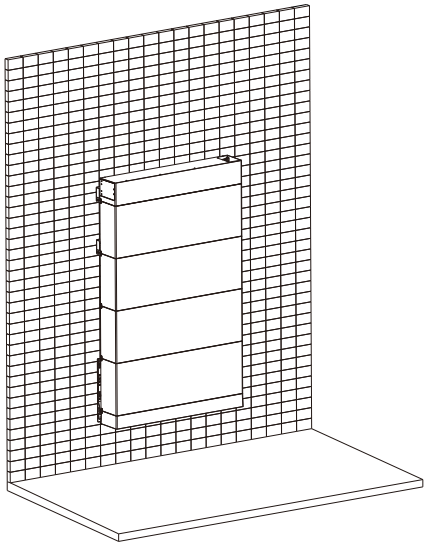

Wall mounting (See Page 30 to 42 for installation details)

5.3 Floor Mounting

5.3.1 Overview

There are three schemes available for users.

Scheme A

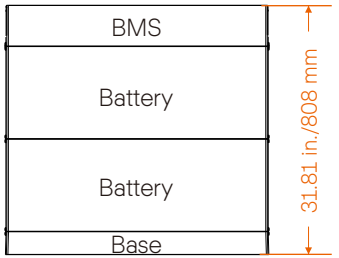

2 * Wall Bracket
2 * Self-tapping Screw
2 * Expansion Bolt
2 * Washer
14 * M5*10 Screw
2 * Platen (3 holes)
4 * Platen (2 holes)

Distance from the equipment:
To left side: ⩾11.81 in./300 mm
To right side: ⩾11.81 in./300 mm

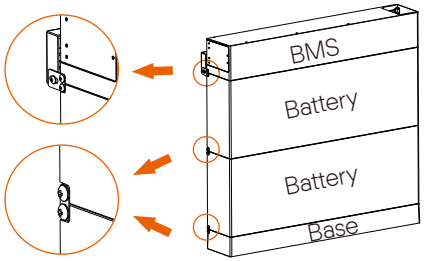

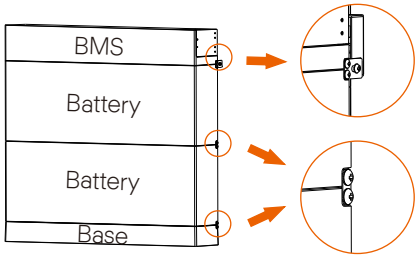

Scheme B

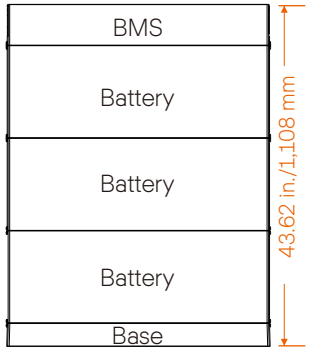

4 * Wall Bracket
4 * Self-tapping Screw
4 * Expansion Bolt
4 * Washer
20 * M5*10 Screw
4 * Platen (3 holes)
4 * Platen (2 holes)

Distance from the equipment:
To left side: ⩾11.81 in./300 mm
To right side: ⩾11.81 in./300 mm

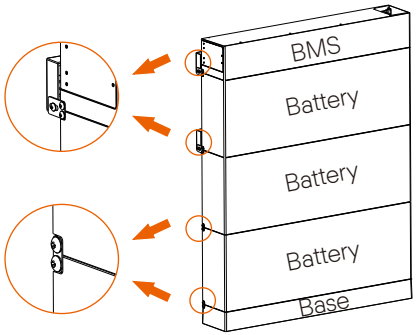

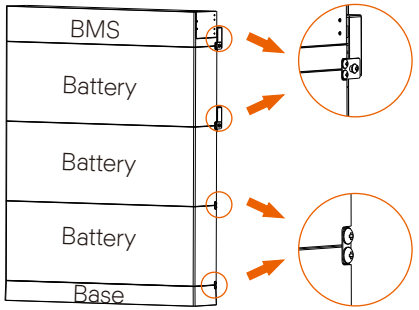

Scheme C

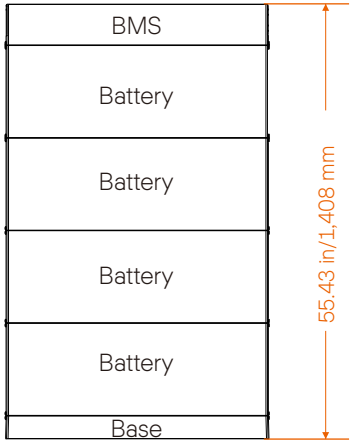

4 * Wall Bracket
4 * Self-tapping Screw
4 * Expansion Bolt
4 * Washer
24 * M5*10 Screw
4 * Platen (3 holes)
6 * Platen (2 holes)

Distance from the equipment:
To left side: ⩾11.81 in./300 mm
To right side: ⩾11.81 in./300 mm

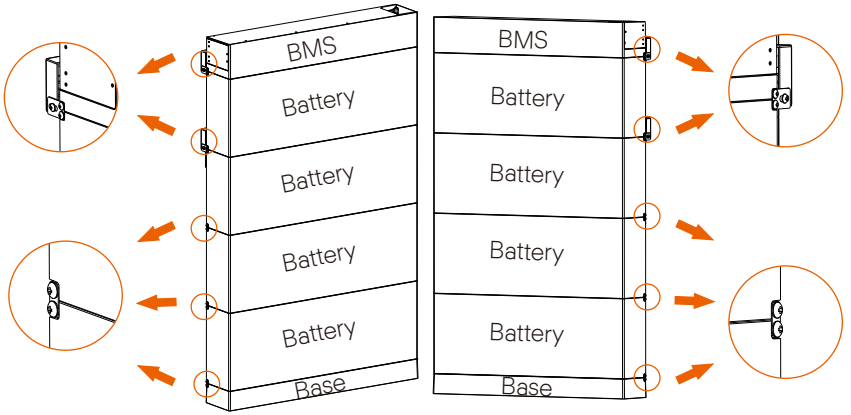

5.3.2 Step

Please reserve enough distance from the equipment to the ceiling/ground for capacity expansion.
Take Scheme C as an example.

Step 1: Place the Base.
(1) Remove the dust cover.

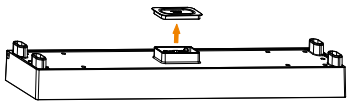

(2) Insert four M8*85 adjustment screws（Accessories Required: Part F) from the bottom of Base, to ensure that the Base is even.

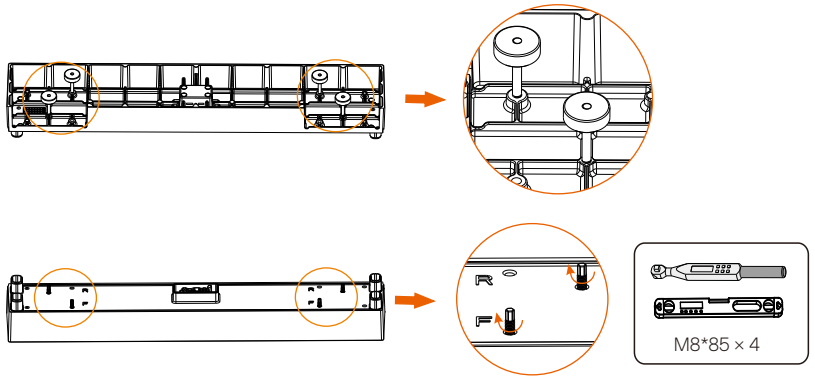

Note!

(a) Use a spirit level to measure the sides of the Base to ensure they are even.
(b) If not, please adjust the adjustment screws by a torque wrench being to ensure that the Base is even.

Step 2: Locate the Base 1.57 in./40 mm away from the wall, accurately mark the location of the Base on both sides with a pen.

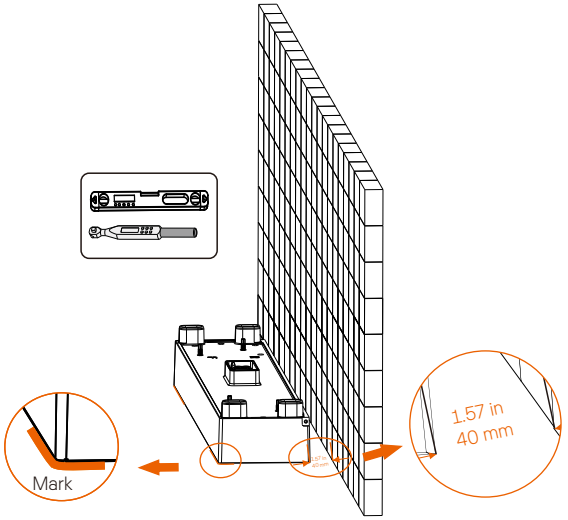

Right View

Step 3: Place the Battery Module onto the Base.
(1) Remove the top and bottom dust covers.
(2) Place the Battery Module on the Base.

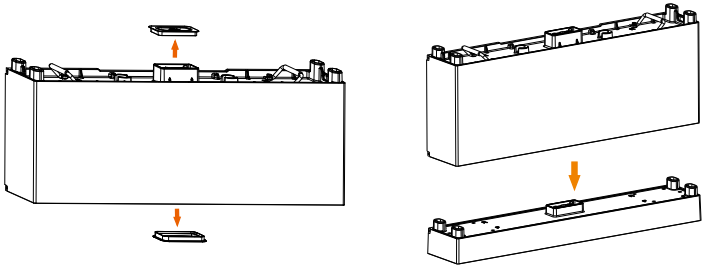

(1) (2)

Note!

If the Base is shifted after placing the Battery Module, move it to its original location according to the mark previously drawn.

(3) On each side, use two M5*10 phillips-head screws (TP-HS50: part E) and a platen (2 holes) (TP-HS50: part G) to secure the combination.

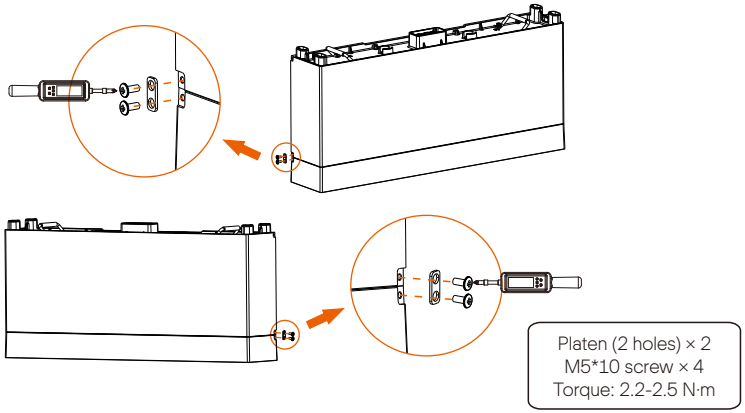

Step 4: Place two Battery Modules in sequence, and secure both sides using M5*10 phillips-head screws (TP-HS50: part E) and platens (2 holes) (TP-HS50: part G). Refer to the Step 3 (3).

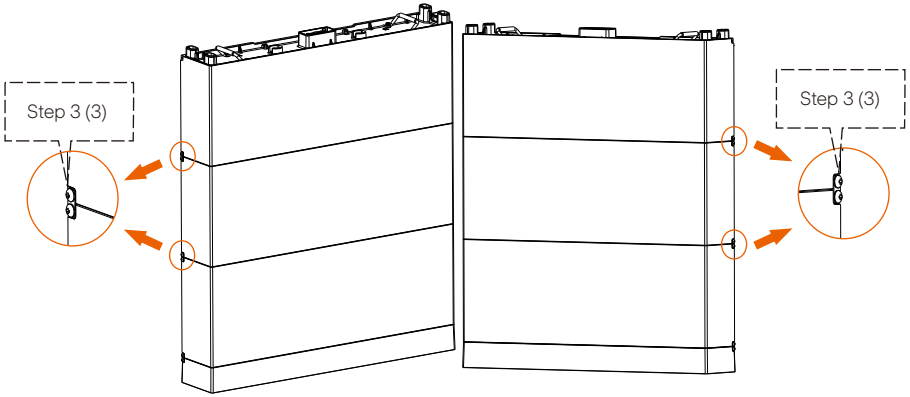

Note!

- For installation against concrete wall, strictly perform the following steps.
- For installation against solid wood wall, directly go to step 7.

Step 5 (Optional):
(1) On each side, feed a M5*10 screw (TP-HS50: part E) through the Platen (3 holes) (TP HS50: part F) and the wall bracket (TP HS50: part A) , but not tighten the screw;
(2) Attach the wall bracket to the wall, align its holes to the holes on the Battery Module, and use a spirit level to ensure it's even;
(3) Accurately mark the location of the wall bracket;
(4) Draw a circle according to the actual stud spacing;
(5) Remove the Wall Bracket, and then drill the hole (at least 3.54 in./ 90 mm) by a drill (drill bit: Ø 0.39 in./10 mm, at least 9.84 inch/250 mm long).

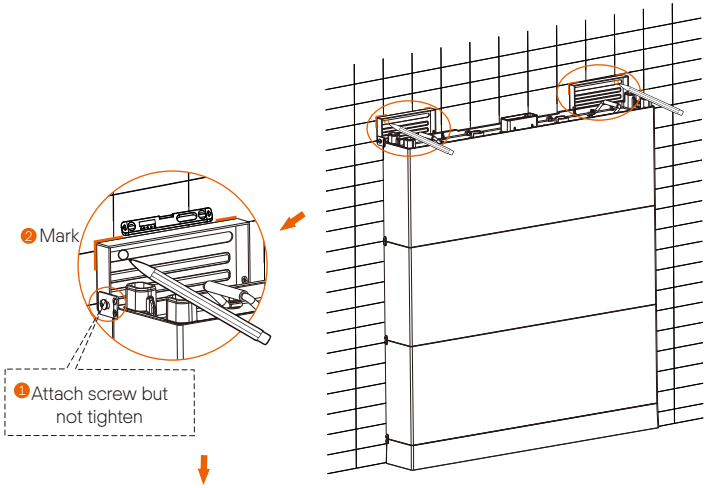

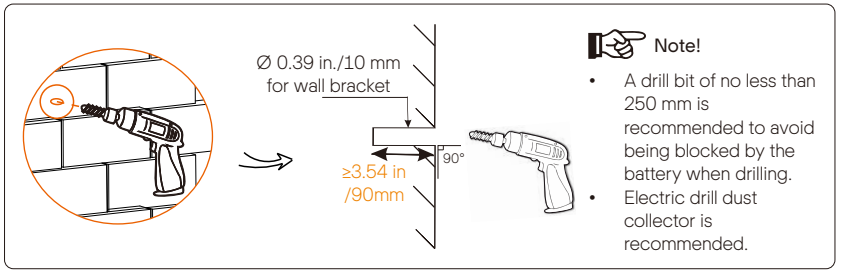

Step 6 (Optional): Hammer in the expansion bolts (TP-HS50: part D) into the holes.

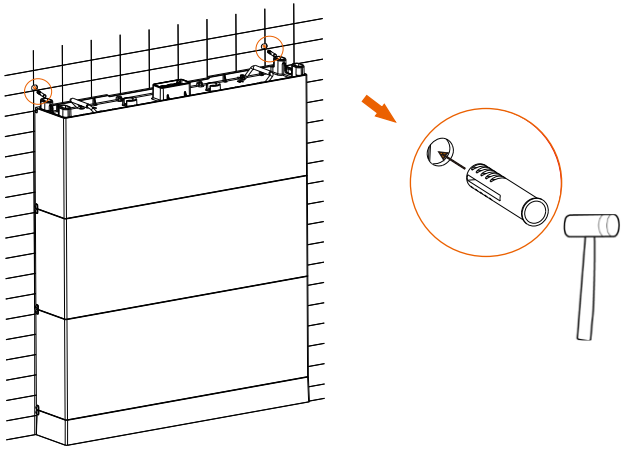

Note!

For installation against solid wood wall, expansion bolts are not required.

Step 7: Align the wall brackets to the wall based on the hole marks, insert two ST6*55 self-tapping screws (TP-HS50: part B) and two washers (TP-HS50: part C) into the holes, and then use a torch wrench (extender length: at least 9.84 inch/250 mm) to secure them.

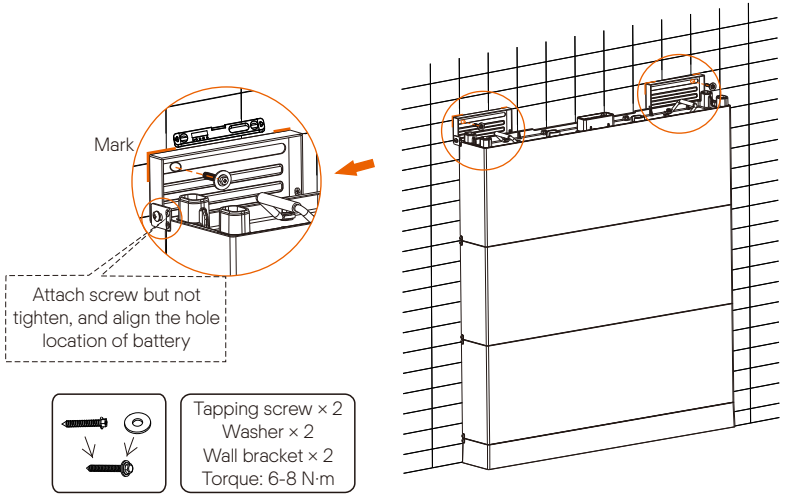

Step 8: Place the fourth battery module.

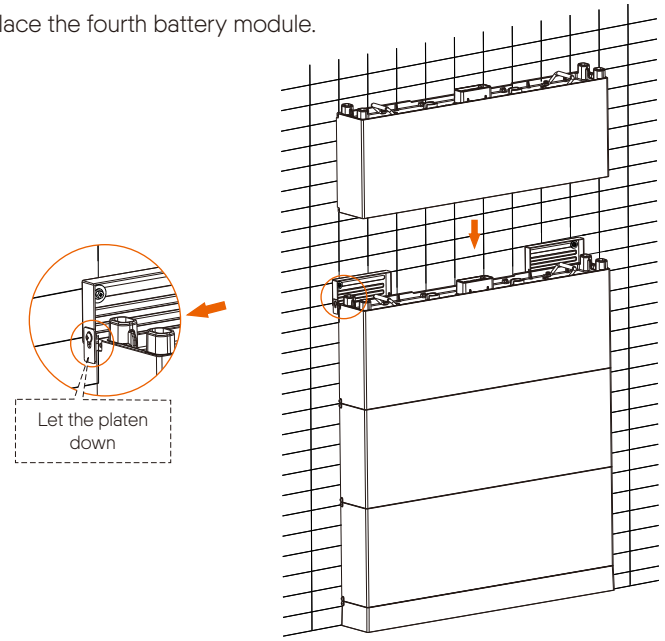

Step 9: Fix the platen, and then tighten all the M5*10 screws on both sides.

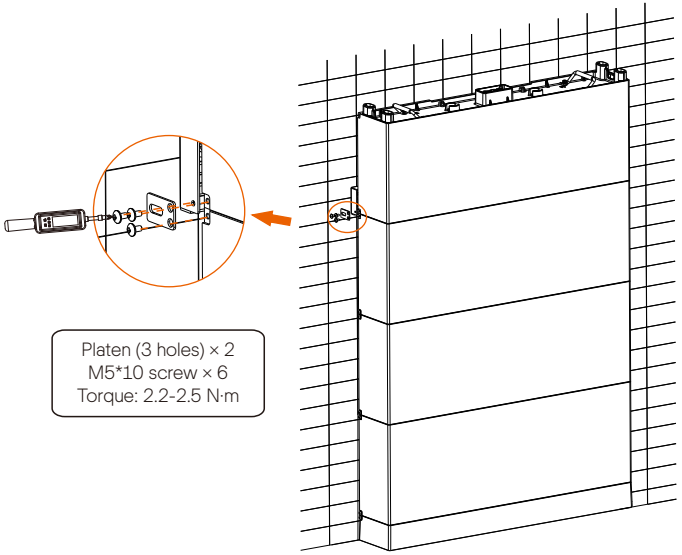

Note!

- For installation against concrete wall, strictly perform the following steps.
- For installation against solid wood wall, directly go to step 10-(6), and expansion bolts are not required.

Step 10:
(1) On each side, feed a M5*10 screw (TP-HS50: part E) through the platen (3 holes) (TP HS50: part F) and the wall bracket (TP HS50: part A) , but not tighten the screw;
(2) Attach the wall bracket to the wall, align its holes to the holes on the Battery Module, and use a spirit level to ensure it's even;
(3) Accurately mark the location of the wall bracket with a pen;
(4) Draw a circle according to the actual stud spacing;
(5) Remove the wall bracket, and drill the hole (at least 3.54 in/90 mm) by a drill (drill bit: Ø 0.39 in./10 mm, at least 9.84 inch/250mm long);
(6) Secure the wall brackets using ST6*55 self-tapping screws (TP-HS50: part B) and washers (TP-HS50: part C), and then use a torch wrench (extender length: at least 9.84 inch/250 mm) to secure them. Refer to the Step 6, 7 and 8.

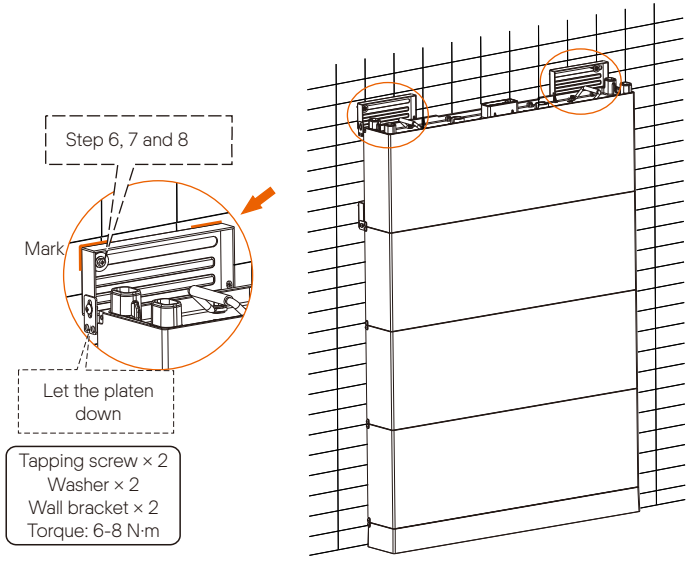

Note!

Electric drill dust collector is recommended.

Step 11: Place BMS onto the Battery Module.
(1) Remove the bottom dust cover.

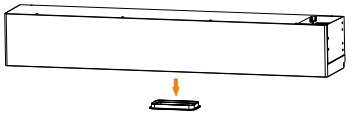

(2) Place the BMS, fix the platens (3 holes), and then tighten all the M5*10 screws on both sides. Refer to Step 9.

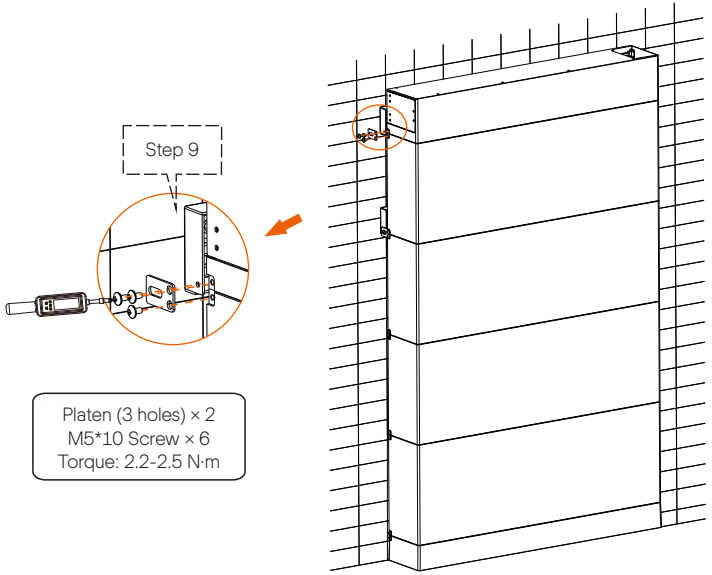

Note!

The holes on BMS is for securing the inverter. For details, please refer to A1-ESS-G2 User Manual.

5.4 Wall Mounting

Note!

For wall mounting, make sure the BMS breaker is no more than 6.56 ft/2 m above the ground so that you can easily shut down the system in emergencies.

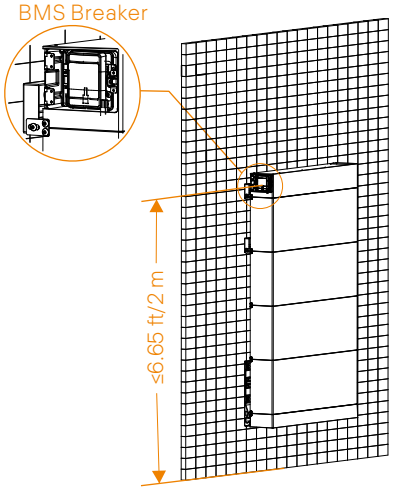

5.4.1 Overview

There are three schemes available for users.

Scheme A

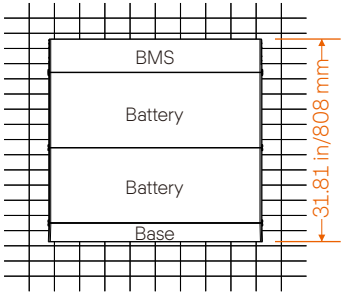

2 * Wall bracket
2 * Self-tapping screw
2 * Expansion bolt
2 * Washer
14 * M5*10 screw
2 * Platen (3 holes)
4 * Platen (2 holes)

Distance from the equipment:
To left side: ≥11.81 in./300 mm
To right side: ≥11.81 in./300 mm
To the ground : >23.62 in./600 mm (The distance is reserved for increase of battery, and a battery's height is 11.8 1 in./300 mm.)

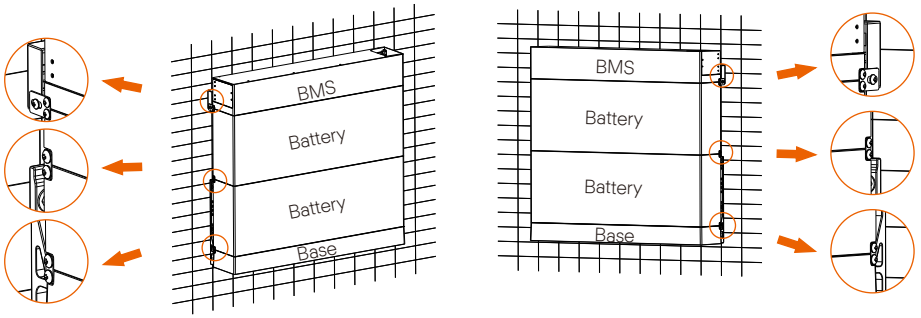

Scheme B

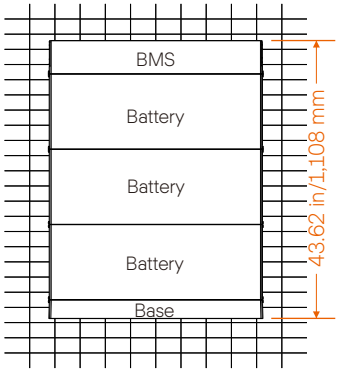

4 * Wall bracket
4 * Self-tapping screw
4 * Expansion bolt
4 * Washer
20 * M5*10 screw
4 * Platen (3 holes)
4 * Platen (2 holes)

Distance from the equipment:
To left side: ≥11.81 in./300 mm
To right side: ≥11.81 in./300 mm
To the ground: >11.81 in./300 mm (The distance is reserved for increase of battery, and a battery's height is 11.8 1 in./300 mm.)

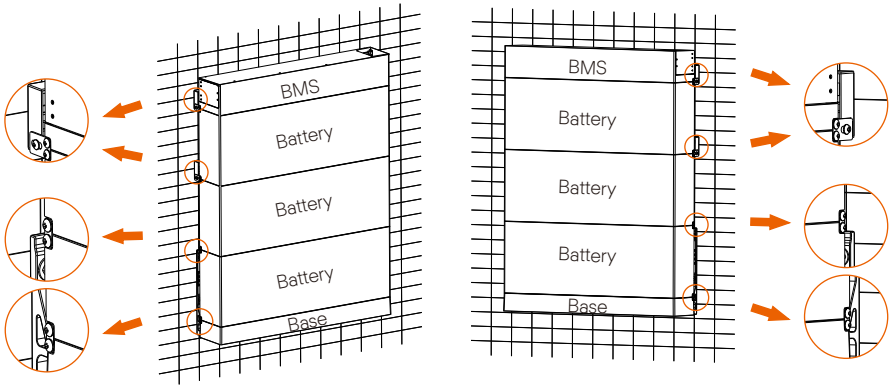

Scheme C

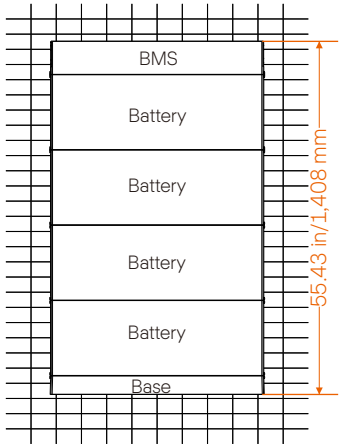

4 * Wall bracket
4 * Self-tapping screw
4 * Expansion bolt
4 * Washer
24 * M5*10 screw
4 * Platen (3 holes)
6 * Platen (2 holes)

Distance from the equipment:
To left side: ≥11.81 in./300 mm
To right side: ≥11.81 in./300 mm
To the ground: It shall be decided according to the local regulations.

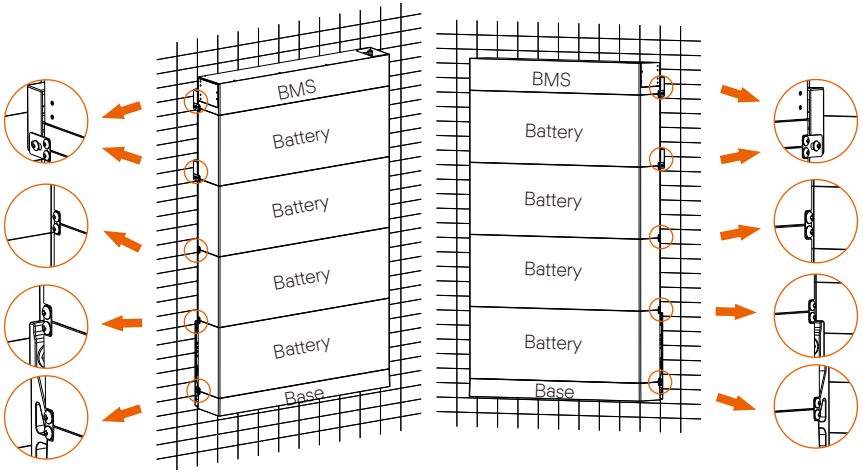

5.4.2 Step

Please reserve enough distance from the equipment to the ceiling/ground for capacity expansion.
Take Scheme C as an example.

Step 1: There are two ways to install the transverse plate onto base support due to 4 kinds of stud spacing, with details as follows: (a) 28 in./711.20 mm or 32 in./812.80 mm; (b) 20 in./508.00 mm or 24 in./609.60 mm.
(1) Attach the transverse plate to the base supports. Ensure that the bubble level on the transverse plate is facing towards you and on the left base support side.
(2) Secure the transverse plate to the base supports using two M5*8 countersunk screws (Accessories Required: part B).

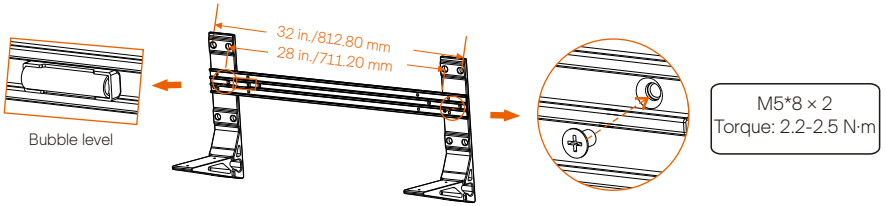

Or, in case of (b), secure the transverse plate and base support using two M5*8 countersunk screws (Accessories Required: part B).

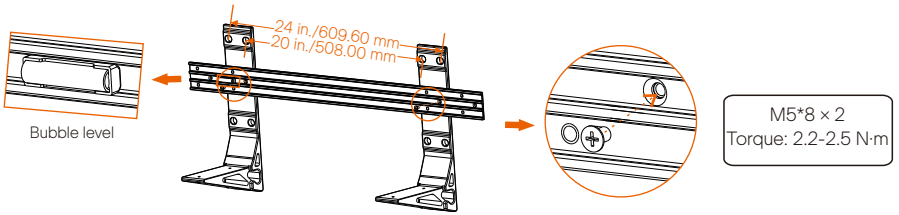

Step 2:
(1)Place the assembled transverse plate and base support to the wall, and look the cylindrical plastic bubble spirit level on the transverse plate. If the bubble isn't in the center, slightly bow it to the horizontal.
(2) Determine the position of holes.
(3) Mark four holes with a pen.
(4) Remove the assembled support and drill holes (at least 3.54 in./90 mm) by Drill (Ø 0.47 in./12 mm for concrete wall, or Ø 0.24 in./6 mm solid wood wall).

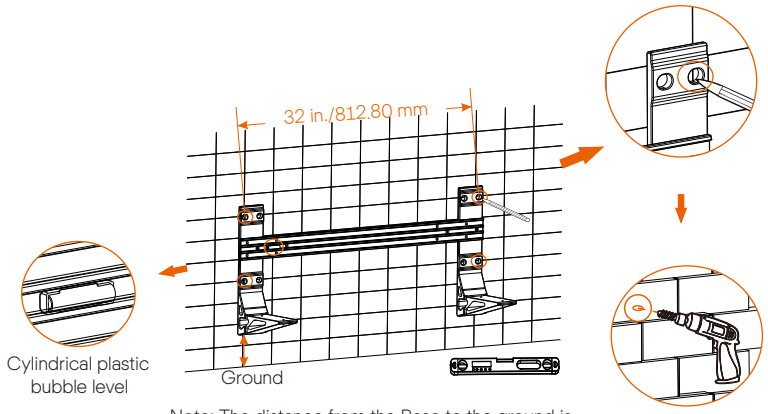

Note: The distance from the Base to the ground is decided according to the local regulations.

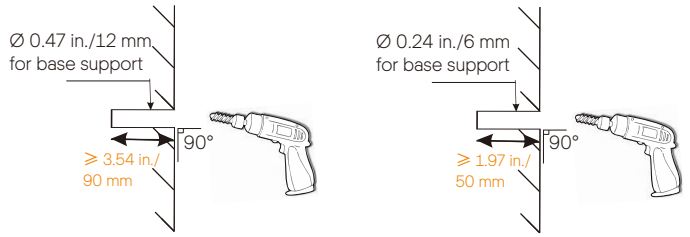

(1) Concrete Wall (2) Solid Wood Wall

Note!

The bubble spirit level on the transverse plate can be used as an auxiliary tool, additionally, please prepare a spirit level to measure whether the plate is even or not.

Step 3:
(1) Place the assembled transverse plate and base support to the wall (or solid wood stud);
(2) Attach screws to the holes, but ensure not to tighten them;
- For installation against concrete wall, attach four M8*85 expansion screws (Accessories Required: part A) to the holes.
- For installation against solid wood wall, attach four M8*88 self-tapping screws (Accessories Required: part D) to the holes.

(3) Check whether the bubble spirit level is horizontal;
(4) Tighten the screws.
- For concrete wall, hammer in the expansion screws with a rubber mallet , and then tighten them with a torque wrench.
- For solid wall, directly tighten the screws with a torque wrench.

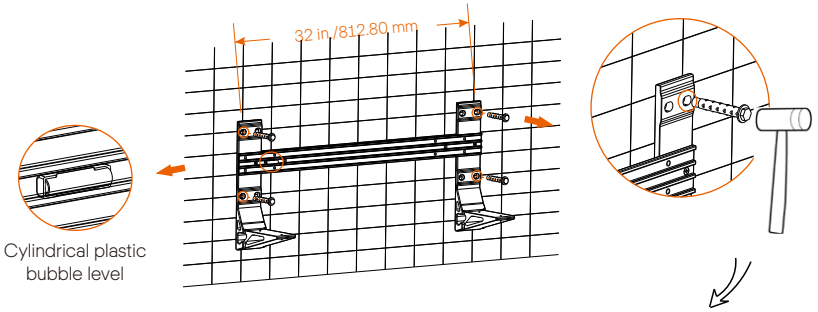

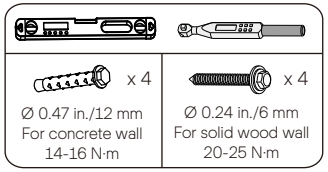

Step 4: Place the base.
(1) Remove the dust cover.

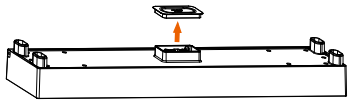

(2) Place the Base onto the assembled base support, and then secure both sides with four M5*20 countersunk screws (Accessories Required: part C).

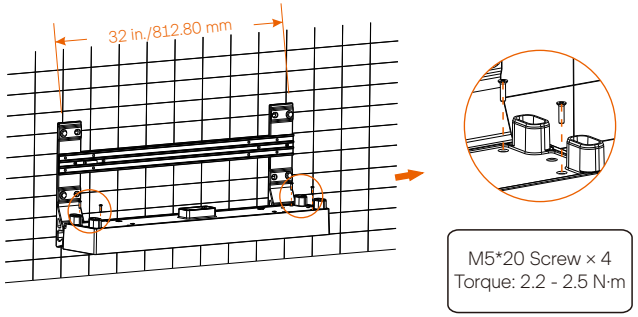

Step 5: Place the Battery Module onto the Base.
(1) Remove the top and bottom dust covers from the Battery Module.
(2) Place the Battery Module onto the Base.

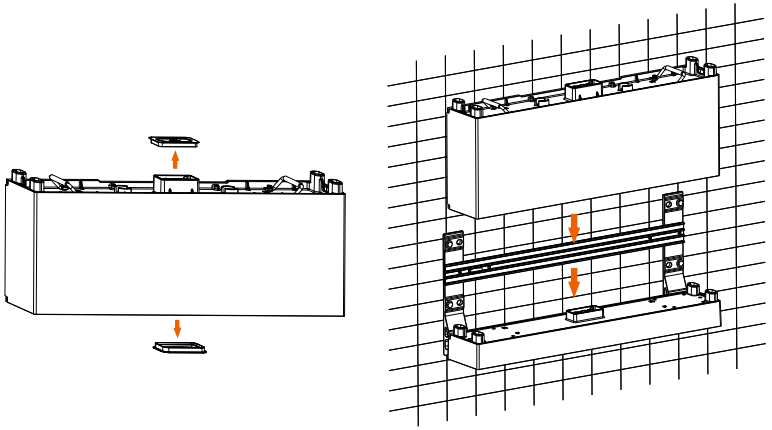

(1) (2)

(3) On each side, use two M5*10 phillips-head screws (TP-HS50: part E) and a platen (2 holes) (TP-HS50: part G) to secure the combination.

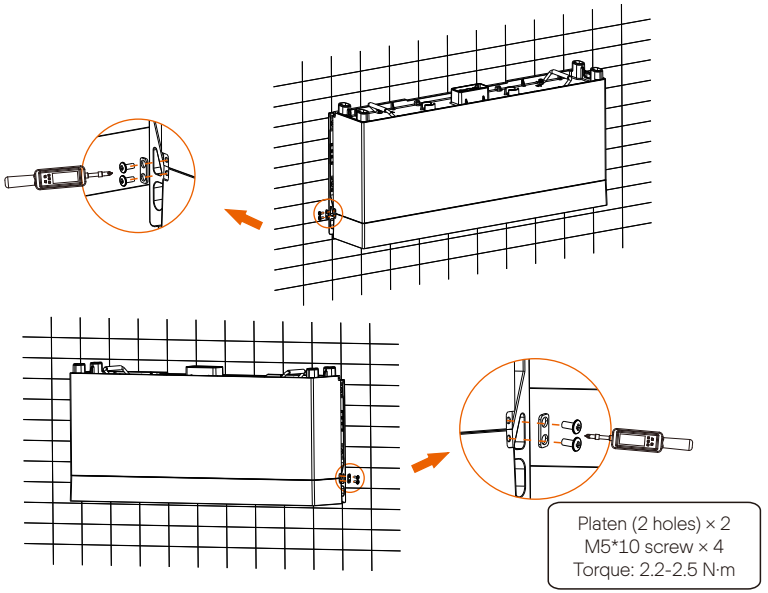

Step 6: Place two Battery Modules in sequence, and secure both sides with M5*10 phillips-head screws (TP-HS50: part E) and platens (2 holes) (TP-HS50: part G). Refer to the Step 5 (3).
Please secure the platens and M5*10 screws immediately after placing a Battery Module.

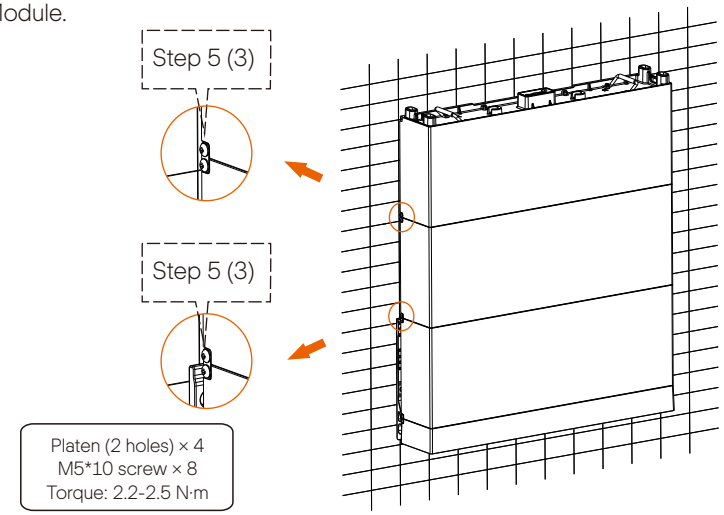

Note!

- For installation against concrete wall, strictly perform the following steps.
- For installation against solid wood wall, please go directly to step 9.

Step 7:
(1) On each side, feed a M5*10 screw (TP-HS50: part E) through the platen (3 holes) (TP HS50: part F) and the wall bracket (TP HS50: part A) , but not tighten the screw;
(2) Attach the wall bracket to the wall, align its holes to the holes on the Battery Module, and use a spirit level to ensure it's even;
(3) Accurately mark the location of the wall bracket;
(4) Draw a circle according to the actual stud spacing;
(5) Remove the wall bracket, and then drill the hole (at least 3.54 in./ 90 mm) by a drill (drill bit: Ø 0.39 in./10 mm, at least 9.84 inch/250 mm long).

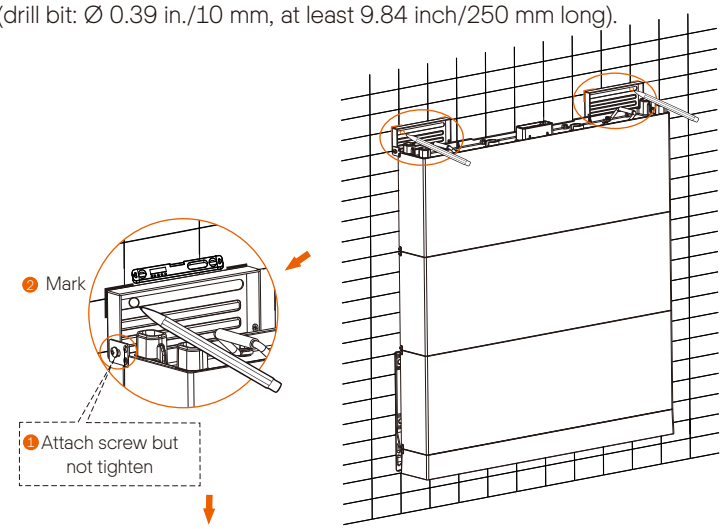

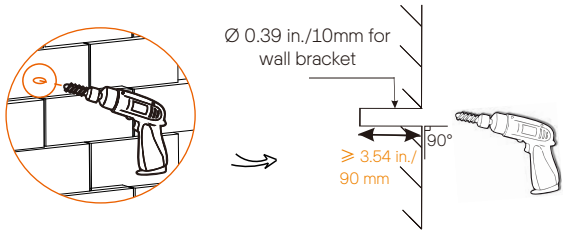

Note!

- A drill bit of no less than 250 mm is recommended to avoid being blocked by the battery when drilling.
- Electric drill dust collector is recommended.

Step 8 (Optional): Hammer in the expansion bolts (TP-HS50: part D) into the holes.

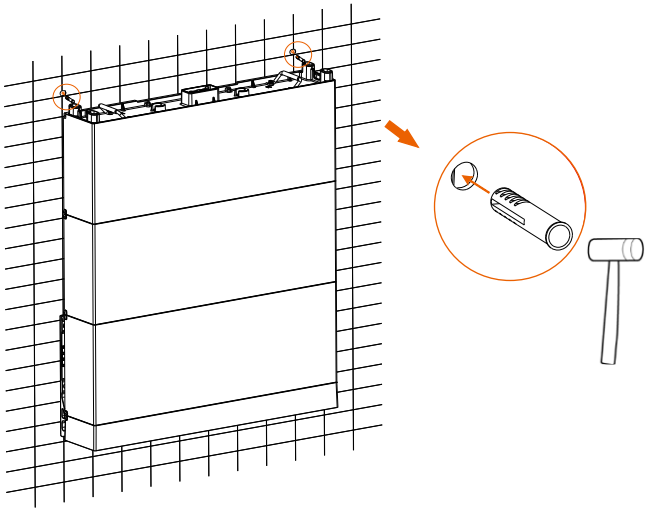

Note!

For installation against solid wood wall, expansion bolts are not required.

Step 9: Align the wall brackets to the wall based on the hole marks, insert two ST6*55 self-tapping screws (TP-HS50: part B) and two washers (TP-HS50: part C) into the holes, and then use a torch wrench (extender length: at least 9.84 inch/250 mm) to secure them.

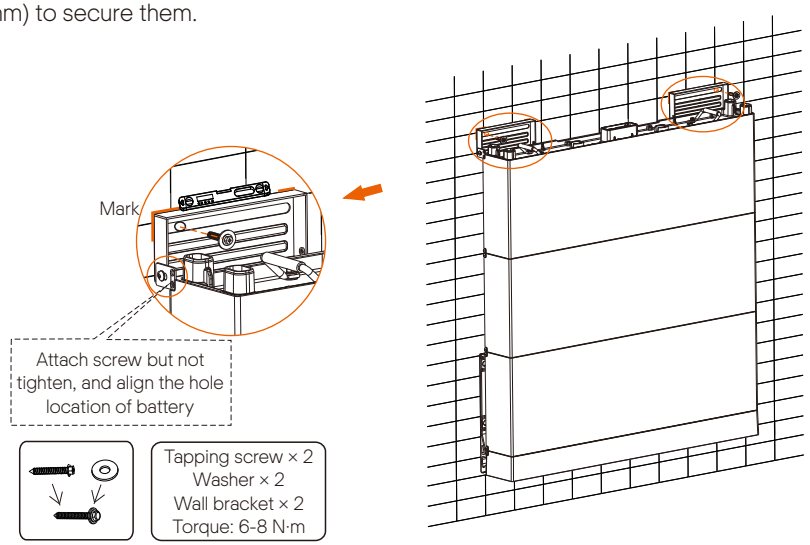

Step 10: Place the fourth battery module.

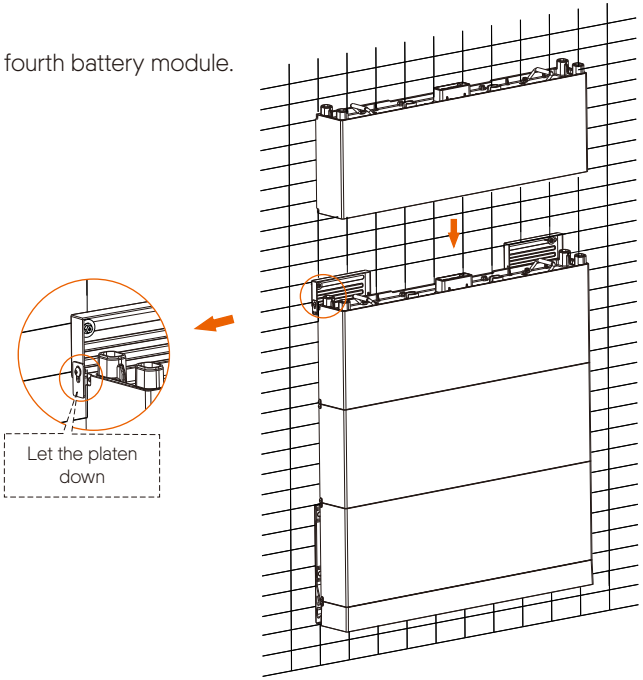

Step 11: Fix the platen, and then tighten all the M5*10 screws on both sides.

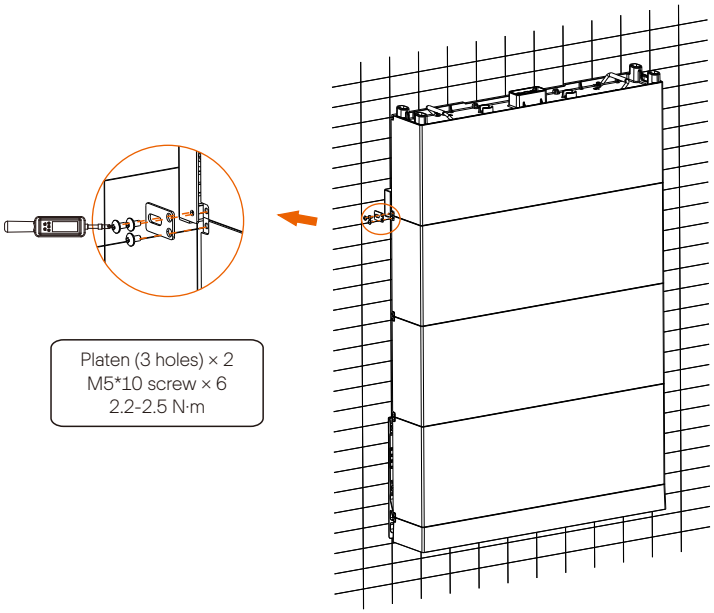

Note!

- For installation against concrete wall, strictly perform the following steps.
- For installation against solid wood wall, directly go to step 12-(7), and expansion bolts are not required.

Step 12:
(1) On each side, feed a M5*10 screw (TP-HS50: part E) through the Platen (3 holes) (TP HS50: part F) and the wall bracket (TP HS50: part A) , but not tighten the screw;
(2) Attach the wall bracket to the wall, align its holes to the holes on the Battery Module, and use a spirit level to ensure it's even;
(3) Accurately mark the location of the wall bracket with a pen;
(4) Draw a circle according to the actual stud spacing;
(5) Remove the wall bracket, and drill the hole (at least 3.54 in/90 mm) by a Drill (drill bit: Ø 0.39 in./10 mm, at least 9.84 inch/250 mm long);
(6) Secure the wall bracket using ST6*55 self-tapping screws (TP-HS50: part B) and washers (TP-HS50: part C), and then use a torch wrench (extender length: at least 9.84 inch/250 mm) to secure them. Refer to the Step 8, 9 and 10.

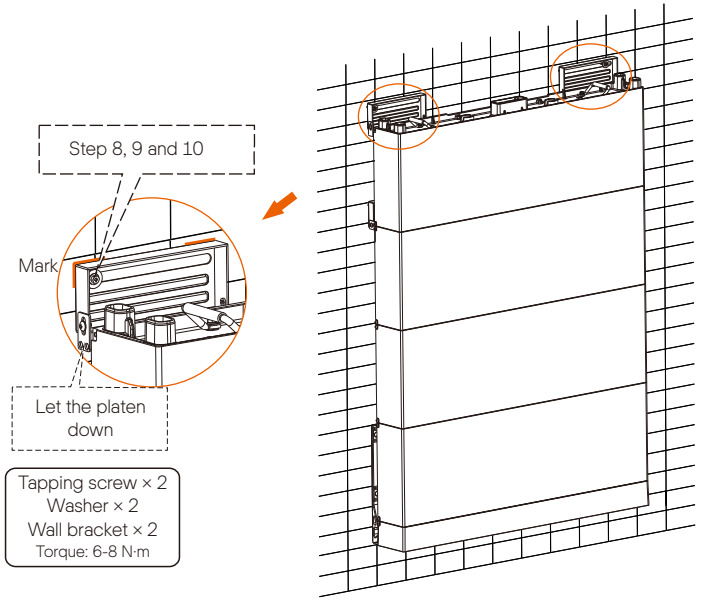

Note!

Electric drill dust collector is recommended.

Step 13: Place BMS on the Battery Module.
(1) Remove the bottom dust cover.

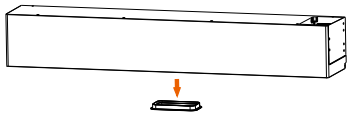

(2) Place the BMS, fix the platen (3 holes), and then tighten the M5*10 screws on both sides. Refer to Step 11.

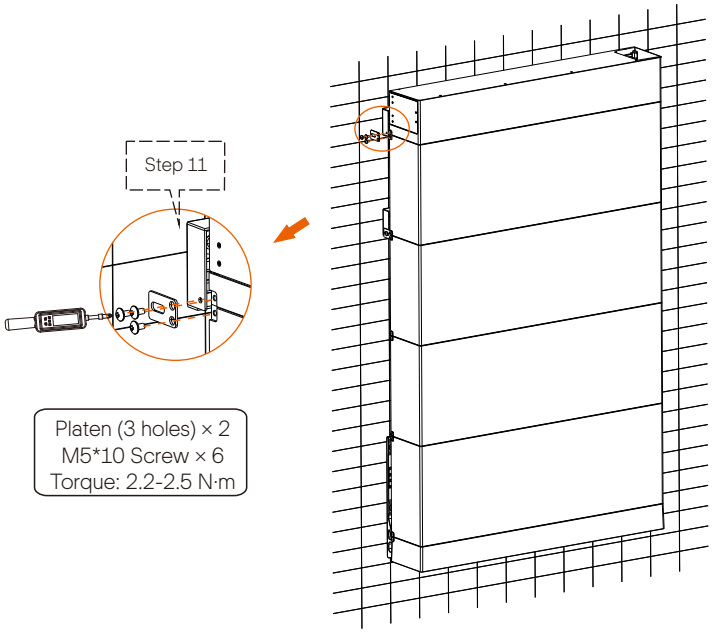

Note!

The holes on BMS are for securing the inverter. For details, see A1-ESS-G2 User Manual.

5.5 Battery Capacity Expansion

The equipment can support capacity expansion.
There are two circumstances in case the user wants to increase a battery module:
1. For floor mounting, remove the inverter before increase of battery module;
2. For wall mounting, if the distance from the equipment to the ground is enough, do not remove the inverter; otherwise, the inverter shall be removed.

6 Wiring

6.1 Making a BMS communication cable

To ensure normal operation of BMS and inverter, a BMS communication cable is required to be made before wiring.
The specific definition of the communication cable is shown as follows:

Sequence	1	2	3	4	5	6	7	8
BMS	/	GND	/	BMS_H	BMS_L	/	A1	B1

The wire order of the communication cable is as follows:

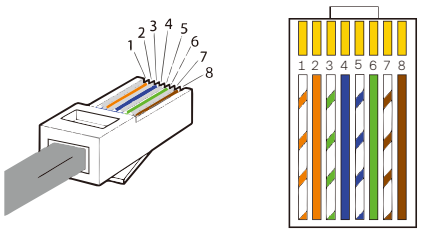

1) Orange stripes on white
2) Orange
3) Green stripes on white
4) Blue
5) Blue stripes on white
6) Green
7) Brown stripes on white
8) Brown

Note: The BMS communication cable shall have a shield layer.

6.2 Wiring

Note!

Before wiring, the guards (if any) shall be removed from connectors. The parts where BMS needs to wire are as follows:

Before wiring,
1. Unscrew the cap at BMS clockwise;
2. Unscrew the screws at BAT+ and BAT- respectively.

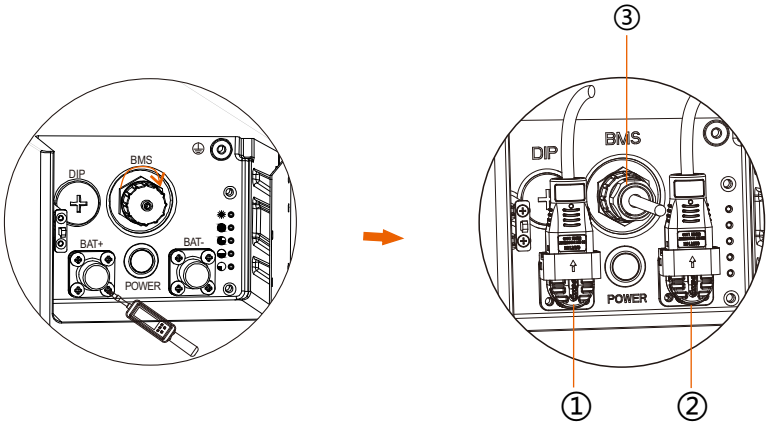

Connect 3 wires of the inverter to the corresponding sockets

Item	Description
①	Insert the orange power cable into the orange socket
②	Insert the black power cable into the black socket
③	Screw the communication cable into the communication socket

Note!

Don't violently remove cables when they are locked.

7 Commissioning

7.1 Commissioning

Verify the model number of each battery module to ensure that they are all the same model.

Step	Description
①	After finishing BMS's wiring, press the left side door panel
②	Open the air switch's guard and toggle switch, to ensure that the inverter does charge to the battery
③	Press the right side door panel
④	Press the button for 1 to 2 sec, and then the system starts

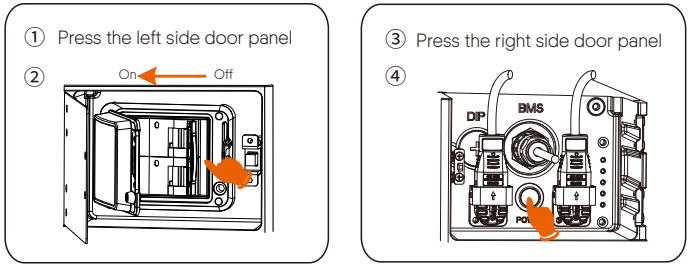

Note!

- Frequently pressing the POWER button may cause a system error.
- Wait at least 10 seconds after pressing the POWER button prior to making another attempt.

Our equipment can provide Black Start capability, meaning that our energy storage inverter and battery can continue to run even if the power grid and photovoltaic panel are out of service. The startup procedure for Black Start is set forth: Press the POWER button and hold it for 20 sec; release the button after the four SOC indicators (1st and 4th indicators, 2nd and 3rd indicators) flash blue alternately; at this point, it will show its current battery charge and enter the Black Start status.

Note!

We do not recommend the use of Black Start as it may cause the communication port to be charged, resulting in an electric shock.

7.2 Status Indicators

7.2.1 BMS (TBMS-MCS60060)

The power indicators show the current battery percentage, with details as show in the figure below.

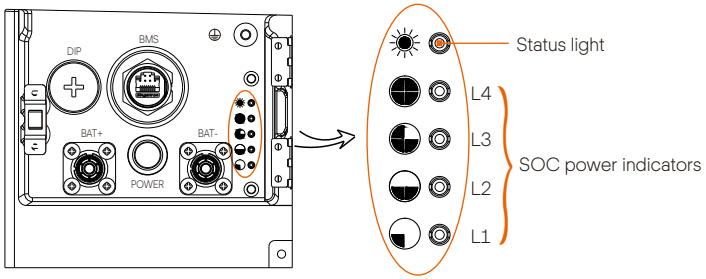

Description of Status Light	
Power Off	Status light and SOC power indicators are off.
Working	When charging, status light will remain on solid green light; when discharging, status light will flash green every 0.5 sec.
Idle State	Status light begins green for 1 sec and turns off for 4 sec; all SOC power indicators are off.
Fault	Status light begins solid red; 10 mins later, the status light will flash red for 1 sec and turn off for 4 sec, and the SOC power indicators will flash to indicate a malfunction (for details, refer to the following table).
Upgrade	Status light flashes green, red and yellow; SOC power indicators flash blue every 0.2 sec.
Black Start	Press the POWER button and hold it for 20 sec; release the button after the four SOC indicators (1st and 4th indicators, 2nd and 3rd indicators) flash blue alternately, and then enter an Black Start status.

Fault	SOC power indicator				Fault code
	L4	L3	L2	L1	
Secondary cell voltage (overvoltage & undervoltage of cell and pack)	Off	Off	Off	F1	1
Temperature fault of secondary cell (overtemperature and undertemperature during charge and discharge)	Off	Off	F1	Off	2
Relay fault (disconnection and connection of relay's anode and cathode)	Off	F1	Off	Off	4
Insulation fault	Off	F1	Off	F1	5
Communication failure between BMS and battery module(s)	F1	Off	Off	Off	8
Communication failure between the 1st battery and 2nd battery	F1	Off	Off	F1	9
Communication failure between the 2nd battery and 3rd battery	F1	Off	F1	Off	10
Communication failure between the 3rd battery and 4th battery	F1	Off	F1	F1	11
Overcurrent fault (overcurrent during charge and discharge)	Off	Off	F1	F1	3
Short-circuit fault	Off	F1	F1	Off	6
Hardware failure of other circuit (self-test)	Off	F1	F1	F1	7
Battery failure (disconnection, short-circuit and internal fault of battery)	F1	F1	Off	F1	13
Sensor fault	F1	F1	F1	Off	14
Inverter communication timeout	F1	F1	F1	F1	15

Note: F1 indicates flashing once.

7.3 Shutting Down T-BAT System

To shut down the system, follow the steps described below:

Step	Description
①	Press the right side door panel
②	Press the button for 1 to 2 sec. In the meantime, the status light is green, and the SOC power lights flash in squence starting with the light farthest from the status light and ending with the light closest to the status light
③	Press the left side door panel
④	Open the air switch's guard and toggle switch

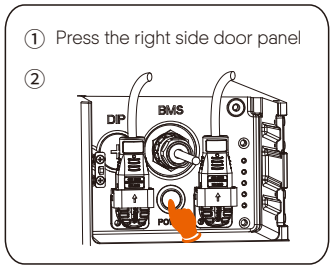

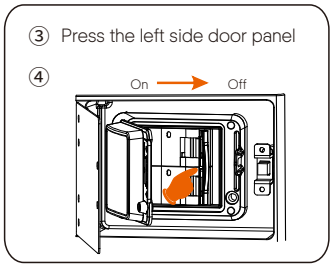

8 Troubleshooting

Check the previous indicators to determine the status of the T-BAT system.
In case of the following circumstances, e.g. voltage or temperature exceeds a limit, a warning state will be triggered.
T-BAT system's BMS periodically reports its operating state to the inverter.
When the T-BAT system exceeds the specific limits, it will enter into a warning state.
When a warning is reported, the inverter will stop work immediately.
Determine the cause of warning by using the monitoring software on the inverter.
The possible error messages are as follows:

Error	Description	Diagnosis & Solution
BMS_External_Err	External fault of BMS	Unable to establish communication with inverter. • Restart BMS; • Contact the Company's after-sales personnel.
BMS_Internal_Err	Internal fault of BMS	Unable to establish communication among batteries. • Restart BMS; • Check if the connection among batteries is normal; • Contact the Company's after-sales personnel.
BMS_OverVoltage	BMS overvoltage	Overvoltage of single battery. • Contact the Company's after-sales personnel.
BMS_LowerVoltage	BMS undervoltage	Undervoltage of single battery. • Battery is forced to charge through inverter; • Contact the Company's after-sales personnel.
BMS_ChargeOverCurrent	Overcurrent charging of BMS	Overcurrent charging of BMS. • Restart BMS; • Contact the Company's after-sales personnel.
BMS_DischargeOverCurrent	Discharge overcurrent of BMS	Discharge overcurrent of BMS. • Restart BMS; • Contact the Company's after-sales personnel.

Error	Description	Diagnosis & Solution
BMS_TemHigh	High temperature of BMS	The temperature of BMS is too high. • Let BMS cool down to normal temperature and restart; • Contact the Company's after-sales personnel.
BMS_TemLow	Low temperature of BMS	The temperature of BMS is too low. • Warm up BMS and restart; • Contact the Company's after-sales personnel.
BMS_CellImbalance	Cell imbalance of BMS	Inconsistency of battery. • Restart BMS; • Contact the Company's after-sales personnel.
BMS_Hardware_Protect	Hardware protection of BMS	Hardware protection of BMS. • Restart BMS; • Contact the Company's after-sales personnel.
BMS_Circuit_Fault	Circuit fault	Circuit fault of BMS. • Restart BMS; • Contact the Company's after-sales personnel.
BMS_Insulation_Fault	Insulation fault	Insulation fault of BMS. • Restart BMS; • Contact the Company's after-sales personnel.
BMS_VoltSensor_Fault	Voltage sensor fault	Voltage sampling fault of BMS. • Restart BMS; • Contact the Company's after-sales personnel.
BMS_TempSensor_Fault	Temperature sensor fault	Temperature sampling fault of BMS. • Restart BMS; • Contact the Company's after-sales personnel.
BMS_TempSensor_Fault	Current sensor fault	Current sampling fault of BMS. • Restart BMS; • Contact the Company's after-sales personnel.
BMS_Relay_Fault	Relay fault	Relay contact adhesion fault of BMS. • Restart BMS; • Contact the Company's after-sales personnel.

Error	Description	Diagnosis & Solution
BMS_Type_Unmatch	BMS type matching error	Different type of BMS. • Restart BMS; • Contact the Company's after-sales personnel.
BMS_Version_Unmatch	BMS version matching error	Different type of BMS. • Restart BMS; • Contact the Company's after-sales personnel.
BMS_Manufacturer_Unmatch	BMS manufacturer matching error	Different type of BMS. • Restart BMS; • Contact the Company's after-sales personnel.
BMS_SW&HW_Unmatch	Software and hardware mismatch error of BMS	Different type of BMS. • Restart BMS; • Contact the Company's after-sales personnel.
BMS_ M&S_Unmatch	BMS and battery module mismatch error	Different type of BMS. • Restart BMS; • Contact the Company's after-sales personnel.
BMS_CR_Unresponsive	Charging request not responded	Inverter does not respond the charging request. • Restart BMS or inverter; • Contact the Company's after-sales personnel.
S_Software_Protect	Software protection of battery module	Software protection of battery module. • Restart BMS; • Contact the Company's after-sales personnel.
BMS_536_Fault	536 fault of BMS	BMS voltage sampling fault. • Restart BMS; • Contact the Company's after-sales personnel.
BMS_ Selfchecking_Fault	Self-test fault of BMS	Self-test fault of BMS. • Restart BMS; • Contact the Company's after-sales personnel.
BMS_Tempdiff_Fault	Temperature different fault	BMS temperature varies greatly. • Restart BMS; • Contact the Company's after-sales personnel.

Error	Description	Diagnosis & Solution
BMS_Break	Disconnection fault of BMS	BMS sampling fault. • Restart BMS; • Contact the Company's after-sales personnel.
BMS_Flash_Fault	Flash fault of BMS	Memory chip fault. • Restart BMS; • Contact the Company's after-sales personnel.
BMS_Precharge_Fault	BMS precharge fault	External short circuit of BMS. • Check the external connection and restart BMS; • Contact the Company's after-sales personnel.
BMS_AirSwitch_Break	Disconnection of switch break of BMS	Disconnection of switch break of BMD. • Restart BMS; • Contact the Company's after-sales personnel.

9 Decommissioning

9.1 Dismantling the Battery

Note!

- Before dismantling the battery, make sure you have shut down the battery system.
- If the BAT cables will be reused after disconnecting, please reinstall and secure the buckles back onto these cables first before reconnecting them. For details, see step 2.
- The arrow direction on the buckle indicates the vertical direction of the groove.

Step 1: Disconnect the cables between BMS and the inverter.
(1) Unscrew the communication cable from the BMS port.
(2) Find the overall position of the groove according to the buckle arrow, place a flat-head screwdriver on the groove at either left or right side of the buckle, and then pry open the buckles fastened on BAT+ and BAT- cables.
(3) Unplug BAT+ and BAT- cables from the battery.

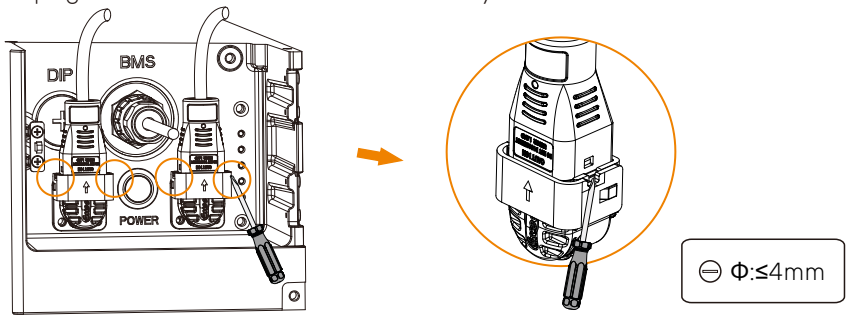

Step 2 (Optional): Reinstall and secure the buckles to the BAT cables.
(1) Align the curve of the cable head to that of the buckle, and then stick the cable head into the buckle base.
(2) Align the buckle cover to the buckle base, and then press the cover down to lock it until a “click” sound is heard.

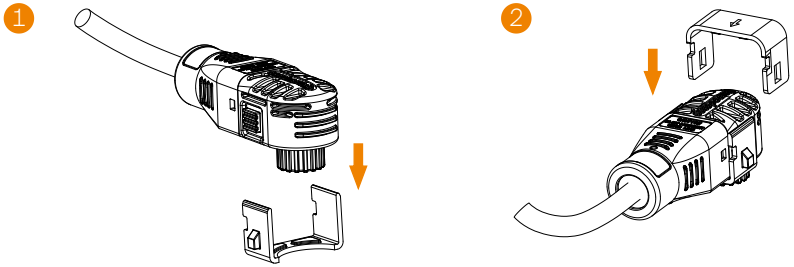

Step 3: Disconnect the series wiring terminal on the battery.
Step 4: Disconnect the rest cables.

9.2 Packing

Pack the BMS and battery modules into the original packaging.
If the original packaging is no longer available, use an equivalent carton or box that meets the following requirements:

- Suitable for loads over 154.32 lbs/70.00 kg
- Properly closed and sealed

10 Maintenance

-If the ambient temperature for storage is -4°F~86°F/-20°C~30°C, recharge the batteries at least once every 12 months.

-If the ambient temperature for storage is 86°F~122°F/30°C~50°C, recharge the batteries at least once every 6 months.

- If the battery(ies) has(have) not been used for more than 9 months, the battery(ies) must be charged to at least SOC 50 % each time.

- For the first installation, the interval among manufacture dates of batteries shall not exceed 3 months.

- If a battery is replaced or added for capacity expansion, each battery's SOC should be consistent. The max. SOC difference should be between ±5%.

- If users want to increase their battery system capacity, please ensure that the SOC of the existing system capacity is about 40%. The manufacture date of the new battery shall not exceed 6 months; in case of exceeding 6 months, please charge the new battery to around 40%.

11 Disclaimer

Triple Power will service the warranty when it is installed and used as described in the Manual. Otherwise, it will not be covered by warranty.
In case there is any direct or indirect damage or defect caused by the following circumstances, Triple Power will not assume any warranty responsibility.

- Force majeure (flooding, lightning strike, overvoltage, fire, thunderstorm, flooding etc.);
- Improper or noncompliant use;
- Improper installation, commissioning, start up or operation (contrary to the guidance detailed in the installation manual supplied with each product);
- Inadequate ventilation and circulation resulting in minimized cooling and natural air flow;
- Installation in a corrosive environment;
- Damage during transportation;
- Unauthorized repair attempts;
- Failure to adequately maintain the equipment.
- External influence including unusual physical or electrical stress (power failure surges, inrush current, etc.);
- Use of an incompatible inverter or devices; and
- Connect to other brands inverters without authority from our Company.

WARNING

This equipment has been tested and found to comply with the limits for a Class B digital device, pursuant to Part 15 of the FCC Rules. These limits are designed to provide reasonable protection against harmful interference when the equipment is operated in a residential installation. This equipment generates, uses, and can radiate radio frequency energy and if not installed and used in accordance with the instruction manual may cause harmful interference to radio communications. However, there is no guarantee that interference will not occur in a particular installation. If this equipment does cause harmful interference to radio or television reception, which can be determined by turning the equipment off and on, the user is encouraged to try to correct the interference by one or more of the following measures:

- Reorient or relocate the receiving antenna.
- Increase the separation between the equipment and receiver.
- Connect the equipment into an outlet on a circuit different from that to which the receiver is connected.
- Consult the dealer or an experienced radio TV technician for help.

Notice: The changes or modifications not expressly approved by the party responsible for compliance could void the user's authority to operate the equivalent.

Warranty Registration Form

For Customer (Compulsory)

Name _____ Country _____

Phone Number _____ Email _____

Address _____

State _____ Zip Code _____

Product Serial Number _____

Date of Commissioning _____

Installation Company Name _____

Installer Name _____ Electrician License No. _____

For Installer

Module (If Any)

Module Brand _____

Module Size(W) _____

Number of String _____ Number of Panel Per String _____

Battery (If Any)

Battery Type _____

Brand _____

Number of Battery Attached _____

Date of Delivery _____ Signature _____

Please visit our warranty website: https://www.solaxcloud.com/#/warranty to complete the online warranty registration or use your mobile phone to scan the QR code to register.

For more detailed warranty terms, please visit SolaX official website: www.solaxpower.com to check it.

614.00002.07

PLEASE REGISTER THE WARRANTY IMMEDIATELY AFTER INSTALLATION!
GET YOUR WARRANTY CERTIFICATE FROM SOLAX!
KEEP YOUR INVERTER ONLINE & WIN SOLAX POINTS!

1

Open your camera app and point your device at the QR code

2

Wait for the camera to recognize the QR code

3

Click banner or notification when it appears on the screen

4

Warranty registration page will be loaded automatically