SigenStor
User Manual

Three-phase Low Voltage System

Version: 01

Release date: 2024-10-11

Copyright Notice

Copyright© 2024 Sigenergy Technology Co., Ltd. All Rights Reserved.

Description in this document may contain predictive statements regarding financial and operating results, product portfolio, new technology, configurations and features of product. Several factors could cause difference between actual results and those expressed or implied in the predictive statements. Therefore, description in this document is provided for reference purpose only and constitutes neither an offer nor an acceptance. Sigenergy Technology Co., Ltd. may change the information at any time without notice.

SIGENERGY and other Sigenergy trademarks are owned by Sigenergy Technology Co., Ltd.
All trademarks and registered trademarks in this document belong to their owners.

Website	LinkedIn	YouTube

www.sigenergy.com

Contents

Revision History 4
Overview 5
Chapter 1 Safety Precautions 6
Chapter 2 Introduction to energy storage system 19
2.1 Product Introduction 19
2.2 Appearance Introduction 21
2.2.1 Appearance and Dimensions 21
2.2.2 Port Introduction 22
2.3 Label Description 23
2.4 Introduction to Typical Networking 25
Chapter 3 Site Selection Requirements 30
Chapter 4 Equipment Installation and Wiring 34
Chapter 5 System Operation 35
5.1 Working Mode 35
5.2 LED Indicator State 35
5.3 mySigen App Query 41
Chapter 6 System Maintenance 42
6.1 Routine Maintenance 42
6.2 Equipment Powering-on/Power-off 44
6.3 Low SOC 45
6.4 Emergency Treatment 47
Chapter 7 Appendix 47
7.1 Technical Parameter 49

Revision History

Version	Date	Description
01	2024.10.11	First official release.

Overview

Introduction

This document mainly introduces the product introduction, networking, system operation and maintenance of the devices in the SigenStor Three-phase Low Voltage system.

Readers

This document is intended for:

- Professionally trained and qualified installers.
- Technical support engineers.

Sign Definition

The following signs may be used in the document to indicate security precautions or key information. Before installation, operation, and maintenance of the equipment, familiarize yourself with signs and their definitions.

Signs	Definition
Danger	Danger. Failure to comply will result in death or serious personal injury.
Warning	Warning. Failure to comply will result in serious personal injury or property damage.
Caution	Caution. Failure to comply will result in property damage.
Tips	Important or key information, and supplementary operation tips.

Chapter 1 Safety Precautions

1.1 General Requirements

Before installing, operating, and maintaining the equipment, familiarize yourself with this user manual. Strictly follow the instructions in the manual and adhere to all safety precautions indicated on the equipment and within the manual.

The "Danger," "Warning," and "Caution" statements described in this manual are only supplementary precautions to all safety notices.

The Company shall not be held liable for equipment damage or property loss resulting from violation of safety operation requirements or safety standards of design, production, and use of equipment, including but not limited to the following:

- The installation environment does not comply with relevant international, national, or regional standards.
- Failure to comply with local laws and regulations during the transportation, installation, operation, and maintenance of the equipment.
- The installation area does not meet the requirements of the equipment.
- Cables, tools, and other materials used do not comply with relevant international, national, or regional standards.
- Damage caused by storage conditions that do not meet the requirements of the equipment.
- Failure to operate according to the instructions and precautions in the manual.
- Failure to follow the prescribed sequence of steps for installation, operation, and maintenance in the manual, unauthorized changes to the installation sequence, unauthorized modification, additions, or changes to equipment, etc.
- The positive or negative terminal of the PV string is short to the ground if the power distribution cables are not installed or routed in accordance with the

requirements. As a result, the AC-DC short circuit may occur when the equipment is operating, resulting in equipment damage.

- Failure to handle the equipment with care or violent installation may result in equipment damage and liquid leakage and pose a risk of fire or explosion hazards.
- Failure to follow the operational requirements indicated on warning labels on the equipment or tools.
- Negligence, improper operation, or deliberate damage.
- Damage caused during transportation by you or a third party you commission.
- Damage caused by the change of the scenarios for which the equipment is intended on the customer or a third party company side.
- Equipment damage caused by failure to use the accessories supplied with the packing box or purchase and use accessories of the same specification on the customer or a third-party company side.
- Equipment damage caused by unauthorized disassembly or replacement of the equipment or modification of software code, or other improper operations.
- Equipment damage caused by force majeure (such as war, earthquake, fire, storms, lightning, floods, and debris flow).
- Damage caused by the failure of the natural environment or external power parameters to meet the standard requirements for the normal operation of the equipment. For example, the actual operating temperature of the equipment is too high or too low.
- The equipment is stolen.
- The equipment is damaged after the warranty period expires.

1.2 Personnel Requirements

- Professionals or well-trained personnel must be assigned to install, operate, and maintain the equipment. During operations, irrelevant personnel are prohibited from approaching the work area.
  - Professionals: Personnel who are familiar with the composition and working principle of the system or equipment, have participated in training or operated the equipment, and are familiar with the factors that may lead to risks during the installation, operation, and maintenance of the equipment and risk levels.
  - Well-trained personnel: Personnel who have participated in relevant technical and safety training, have relevant experience, can identify operational risks, and can take relevant corrective measures to reduce the impact of risks.
- For special operations, such as climbing and electrical operations on high-voltage equipment, the operator must be certified for special operations as required by the local country/region.
- Only authorized professionals can replace the equipment or components (including software), remove safety devices, or repair the equipment.

1.3 Handling and Transportation Requirements

- Wear personal protective equipment such as protective gloves and safety shoes while handling the equipment.
- Select an appropriate handling method according to the equipment weight.
- When handling the equipment, always follow the package orientation marking. Do not turn the equipment upside down or tip it over.
- The tilt angle of the equipment with packaging must be less than or equal to 15°. After the equipment is unpacked, its tilt angle must be less than or equal to 10°. Take into account the heights of persons assigned to handle the equipment to ensure that the equipment is handled stably.
- Lift or move the equipment slowly to avoid personal injury.
- When using a forklift, position the forks so that the center of gravity of the equipment is aligned and secure the equipment as needed. Designate a person to keep an eye on the handling. Do not stand under the forks.
- Place the equipment according to the stack requirement indicated on the packaging.
- Ensure the equipment is placed on a flat and stable surface and do not tilt or place the equipment upside down.
- Transport the equipment with proper protective measures to avoid exposure to rain or water.

1.4 Storage Requirements

- The storage location must comply with local laws and regulations.
- Do not store the equipment without packaging.
- Do not expose the equipment to direct sunlight, humidity, condensation, dirt, rain, or a flammable, explosive, or corrosive environment.
- Regularly check the equipment (recommended once every three months) during the storage period. Take measures to prevent pests and rodents in the storage area. Replace the packaging immediately if the packaging is damaged by pests or rodents.
- Store the equipment according to the storage requirements indicated on the packaging.
- Regularly record the temperature, humidity, and other conditions of the storage environment during the storage period.
  - Storage temperature: -40°F to 158°F (-40°C to 70°C), with a recommended range of 68°F to 86°F (20°C to 30°C).
  - Relative humidity: 0% RH to 95% RH.
- Follow the First-in First-out (FIFO) principle for shipment.
- If your equipment has been stored for more than 2 years, please go through professional inspection and testing before putting it into operation.

1.5 Operation Requirements

Danger

High Voltage and Hazards:

- Do not perform operations on the equipment with power on (including but not limited to installation, wiring, replacement). Before operation, please make sure all power supplies to the equipment have been disconnected, including but not limited to the grid side, inverter and diesel generator power switches. Operation with power on may lead to fire, electric shock, arcing, or explosion, resulting in personal injury or property loss.
- Do not power on the equipment before the installation or professional evaluation is complete.
- Do not operate the equipment in bad weather conditions, including but not limited to lightning, rain, snow, or typhoon.
- Do not expose the equipment to high temperatures or heat sources for an extended period of time, such as sunlight, ignition sources, or heaters.
- Do not clean or soak the equipment with water, alcohol, oil, or other liquids to avoid leakage current and electrical shock.
- Do not impact, drag, or step on the equipment. In case of accidental impact, stop using the equipment immediately and contact your sales representative. The equipment shall be subject to inspection and evaluation by professionals before being put into operation again.
- Before operating the equipment, check whether the equipment is damaged. For any abnormality, such as appearance deformation or odor, contact your sales representative instead of disassembling the equipment without authorization.
- If you find that the equipment works abnormally or that the equipment may cause personal injury, such as appearance deformation, odor, or arcing, stop your operation immediately, report the fact to the person in charge, and take effective measures.
- Wear personal protective equipment such as insulating gloves, insulating shoes, and safety hats while operating the equipment. Do not wear

conductive accessories such as metal bracelets, rings, or necklaces.

- Use insulated tools when installing or wiring.
- Equipment that must be grounded is permanently connected to the PGND. Connect the PGND in the first step before connecting cables, and when replacing an equipment, remove the PGND in the last step.
- Do not touch terminals with bare hands or conductors or damp objects. Measure the voltage of the contact before touching a terminal to avoid the risk of electric shock.
- Prevent foreign objects from falling into the equipment while operating the equipment. Otherwise, the equipment may be short-circuited or damaged, or power supply to loads may be derated or power failure may occur, or this may even result in personal injury.
- Before powering off the 10 kV or higher medium-voltage equipment, it is recommended to turn off the inverter and switch off the low-voltage equipment first.
- Touch up paint scratches on the surface of the equipment.

Warning

- Do not disable any protective devices, including but not limited to protective covers and surge arresters.
- Do not touch the hot surface in the heat dissipation area when the equipment is operating.
- Do not cover the heat dissipation area, and maintain a 11.81 in to 23.62 in (300 mm to 600 mm) channel for heat dissipation to prevent high temperatures from causing a fire when the equipment is operating.

Caution

- You must obtain a license for power utilities in the country or region where the equipment is located before the equipment can be connected to the grid.
- Do not use damaged or unqualified cables or tools. Before operating the equipment, ensure that all cables and tools comply with the requirements, and keep records. Upon completion of operation, make an inventory and recovery the cables and tools in full to prevent them from being left in the equipment to avoid safety hazards.
- Comply with the power station safety regulations of the country or region where the equipment is located when operating the equipment, including but not limited to operation tickets and work tickets.
- Carbon dioxide fire extinguishers or ABC dry powder fire extinguishers are recommended.
- Keep irrelevant personnel away from the operation site. Please install a temporary fence or set a warning line around the operation site, and attach "No Entry for Irrelevant Personnel" and other signs.
- Do not cover or damage the warning label or nameplate on the equipment. Replace the warning label or nameplate if it is damaged or cannot be clearly recognized due to long-term use.
- Before operating or maintaining the equipment, check whether there is water, snow, or other debris on the top of the equipment. Clean it up when necessary.

Do not use the equipment in the following situations:

- When connected to public infrastructure systems, such as traffic lights or security systems.
- When connected to emergency medical equipment.
- When connected to elevators and other control devices.
- Any other critical systems.

1.5.1 Equipment Installation

Warning

- Before installing the equipment, check whether the screws installed before delivery are secured. Before delivery, the tightened screws are marked with lines. If the marks are misaligned, the screws are loose. Tighten the screws again.

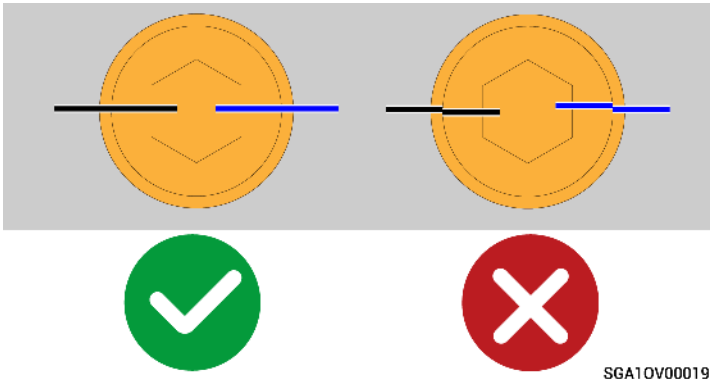

- Get well prepared for the bearing load when handling the equipment to prevent it from falling and causing injury.

Ladder Safety

- Do not use ladders if you are not well-trained or instructed.
- Do not use unqualified ladders, including but not limited to damaged, broken, deformed, or temporary ladders.
- Do not use a ladder that does not meet the load-bearing requirements.
- Use wooden or fiberglass ladders when you climb up for electrical operations.
- A straight ladder must be set at a gradient of 60° to 70°.
- Do not throw objects from heights when operating on a ladder.
- We recommend that you designate a person to monitor when operating on a ladder.
- Lock the door when using a ladder at the entrance of the passageway.

Drilling Safety

- Do not drill holes on the equipment.

- Wear safety goggles and protective gloves when drilling holes.
- Do not place the equipment near drilling positions to prevent debris from falling into the equipment.
- Clean up any debris promptly after drilling.

1.5.2 Cable Connections

Danger

- Before connecting cables, ensure that the equipment is not damaged. Otherwise, electric shock or fire hazard may occur.
- Before connecting or removing cables, ensure that the upstream and downstream switches of the equipment and the switches on the equipment are turned off.

- Do not intertwine cables or route cables across each other. It is recommended that cables be bundled by category.
- Do not route cables through the air inlet and air outlet of the equipment.
- Do not use cables with damaged insulation. No sharp edges or burrs are allowed in cable holes. Replace cables with insufficient length. Do not extend cables using welding or similar methods.
- The ground impedance of the equipment should meet national and regional standards.
- Verify the cable selection by referring to IEC-60364-5-52 or local laws and regulations if there are changes in cabling methods or environmental conditions such as temperature and humidity.
- Keep cables at least 3.94 in (100 mm) away from the heat source to prevent cable aging at high temperatures.
- The lower the ambient temperature is, the more brittle the cable plastic sheath becomes. To prevent sheath cracking during installation, install cables at temperatures above 32°F (0°C) and handle them with caution when transporting. If cables have been stored in an environment below 32°F (0°C) for an extended period of time, move cables to an environment above 32°F (0°C) for at least 24 hours before using again.
- Before installing cables, ensure that cables are properly labeled, insulated, and identified. Connect cables correctly and completely according to the labels and installation instructions.

- For underground cabling, fix cables with cable trays and clips. Before backfilling, reserve a proper cable length to ensure that cables are tightly fitted against the ground in the backfilling area. Otherwise, terminals may be deformed, damaged, or loosened due to stress on cables.

1.5.3 Equipment Maintenance and Replacement

- Before maintaining or replacing the equipment, power off and wait for the delay time as instructed on the label on the equipment before operation.
- When maintaining the power equipment or power distribution equipment at the downstream direction of the power supply equipment, turn off the output switch of the power supply equipment.
- When maintaining the power distribution equipment or power equipment at the downstream direction of the power supply equipment, turn off the output switch of the power supply equipment. To maintain a load, disconnect the load from the power switch.
- During equipment maintenance, attach labels, for example, "Do Not Turn On", on the upstream and downstream switches or circuit breakers and set warning signs to prevent accidental reconnection. Power up and put the equipment back into operation only after trouble is eliminated, or replacement is complete.
- Damaged cables, if any, should be replaced by professionals.

Chapter 2 Introduction to energy storage system

2.1 Product Introduction

Inverter

Product code	Model No.	Name	Function specification
SigenStor EC	SigenStor EC 5.0 TPLV	Sigen Energy Controller 5.0 kW Three Phase Low Voltage	Inverter; it can be used in photovoltaic energy storage scenarios and needs to be used together with PV modules and SigenStor BAT.
	SigenStor EC 6.0 TPLV	Sigen Energy Controller 6.0 kW Three Phase Low Voltage	
	SigenStor EC 8.0 TPLV	Sigen Energy Controller 8.0 kW Three Phase Low Voltage	
	SigenStor EC 10.0 TPLV	Sigen Energy Controller 10.0 kW Three Phase Low Voltage	
	SigenStor EC 12.0 TPLV	Sigen Energy Controller 12.0 kW Three Phase Low Voltage	
Sigen Hybrid	Sigen Hybrid 5.0 TPLV	Sigen Hybrid Inverter 5.0 kW Three Phase Low Voltage	Inverter; it can be used in conjunction with PV modules for pure PV applications or in combination with PV modules and SigenStor BAT for photovoltaic storage systems after the purchase and activation of a license.
	Sigen Hybrid 6.0 TPLV	Sigen Hybrid Inverter 6.0 kW Three Phase Low Voltage	
	Sigen Hybrid 8.0 TPLV	Sigen Hybrid Inverter 8.0 kW Three Phase Low Voltage	
	Sigen Hybrid 10.0 TPLV	Sigen Hybrid Inverter 10.0 kW Three Phase Low Voltage	
	Sigen Hybrid 12.0 TPLV	Sigen Hybrid Inverter 12.0 kW Three Phase Low Voltage	

Battery Pack

Product code	Model No.	Name	Function specification
SigenStor BAT	SigenStor BAT 5.0	Sigen Battery 5 kWh	It can store electric energy.
	SigenStor BAT 8.0	Sigen Battery 8 kWh	

Power Sensor

Product code	Model No.	Name	Function specification
Power Sensor	Sigen Sensor TP-DH （SDM630MODBUS V2）	Sigen Power Sensor Three Phase DH	Data acquisition for grid connection points enables zero-power grid connection.
	Sigen Sensor TP-CT120-DH(SDM630MCT 40mA/120A)	Sigen Power Sensor Three Phase External CT 120 A DH	
	Sigen Sensor TP-CT300-DH （SDM630MCT 40mA/300A）	Sigen Power Sensor Three Phase External CT 300 A DH	
	Sigen Sensor TP-CT600-DH （SDM630MCT V2/600A）	Sigen Power Sensor Three Phase External CT 600 A DH	
	Sigen Sensor TPX-CH （DTSU666）	Sigen Power Sensor Three Phase Without CT CH	

2.2 Appearance Introduction

2.2.1 Appearance and Dimensions

Inverter and Battery Pack

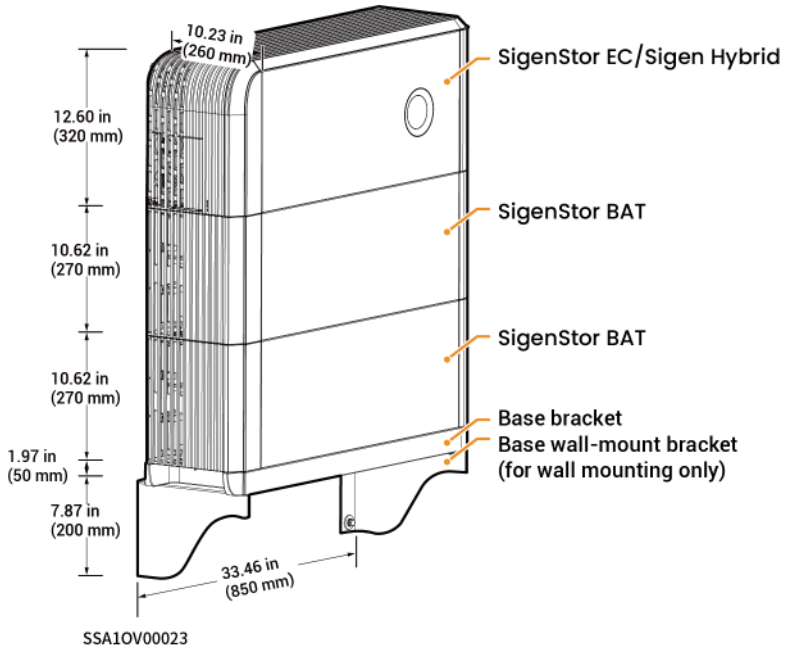

2.2.2 Port Introduction

SigenStor EC/ Sigen Hybrid Left View

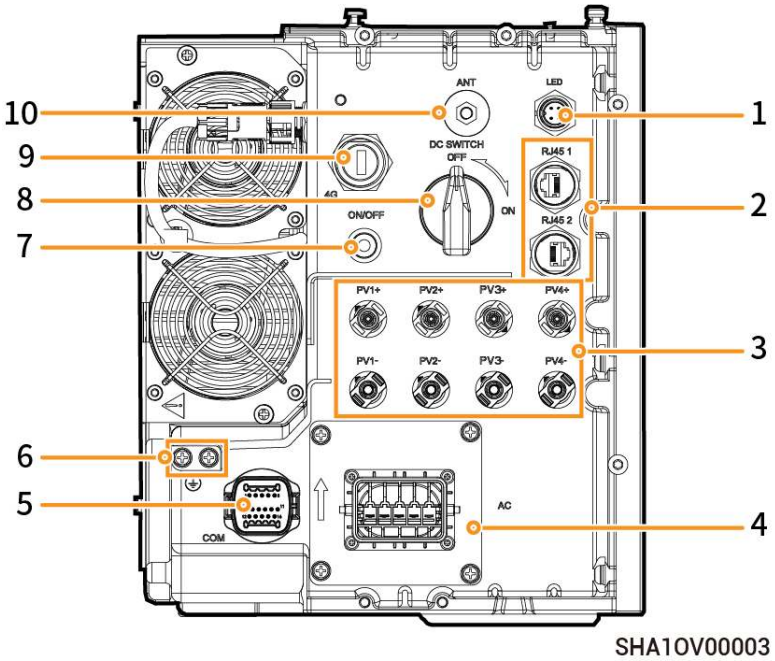

S/N	Name	Marking
1	Decorative cover strip light interface	LED
2	Network interface	RJ45 1/ RJ45 2
3	DC input interface	PV1+/PV2+/ PV3+/PV4+/ PV1-/PV2- /PV3-/PV4-
4	AC output interface	AC
5	Communication interface	COM
6	Ground screw	-
7	Switch button	ON/OFF
8	DC switch	DC SWITCH
9	(Reserved) Sigen CommMod interface	4G
10	Antenna interface	ANT

2.3 Label Description

Symbols	Definition
	Danger! High Voltage High voltage exists inside the equipment when powered on. Do not open the casing when the equipment is running. Any maintenance or servicing operations must be performed by trained and skilled electrical engineers.
	Warning! Life at risk. The equipment has potential hazards after running. Take proper protection when operating the equipment.
	After the equipment is powered off, the discharge of internal components is delayed. Wait 10 minutes until the equipment is fully discharged according to the label time.
	Warning! Risk of burns. The surface of the heat dissipation area is hot when the equipment is running. Do not touch it to avoid burns.
	Please refer to the instructions to operate the equipment.
	Earthing mark.

2.4 Supported Power Supply Methods for the Power Grid

The supported grid power modes include Delta Grid and Wye.

Delta Grid

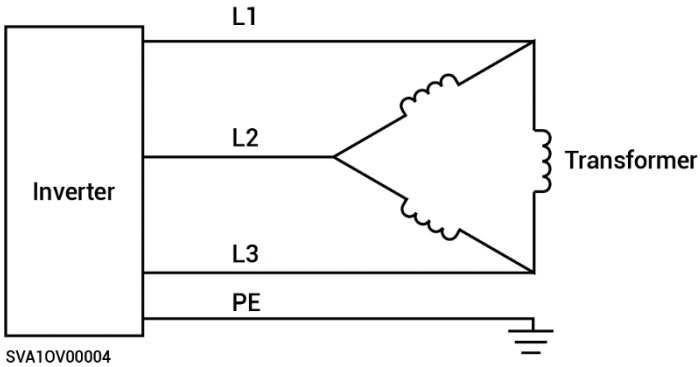

Wye Grid

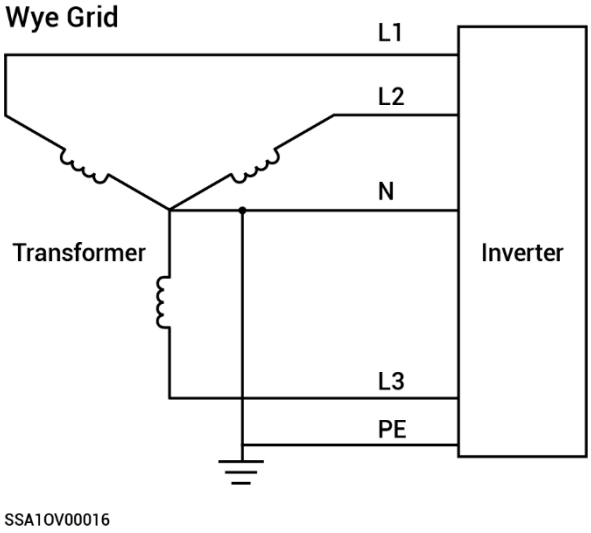

2.5 Introduction to Typical Networking

- The product can be used in industrial and commercial energy storage systems. An industrial and commercial energy storage system consists of PV panels, inverters, battery packs, main control switches, loads, and power grid.
- An industrial and commercial energy storage system is mainly intended to store direct current generated by the PV panels in the battery packs and can also convert the electric energy in the PV panels and battery packs into alternating current to power loads or be fed into the power grid.

Tips

Under backup power networking, the duration of off-grid operation of the backup power load is related to the power supply capacity of the PV storage system. If there is an abnormality in the power supply of the PV storage system during off-grid operation (including but not limited to abnormal PV power generation, insufficient battery power, and abnormal power supplies to the diesel generator), the backup power load will still be unable to operate.

Networking Diagram (Whole Home Backup)

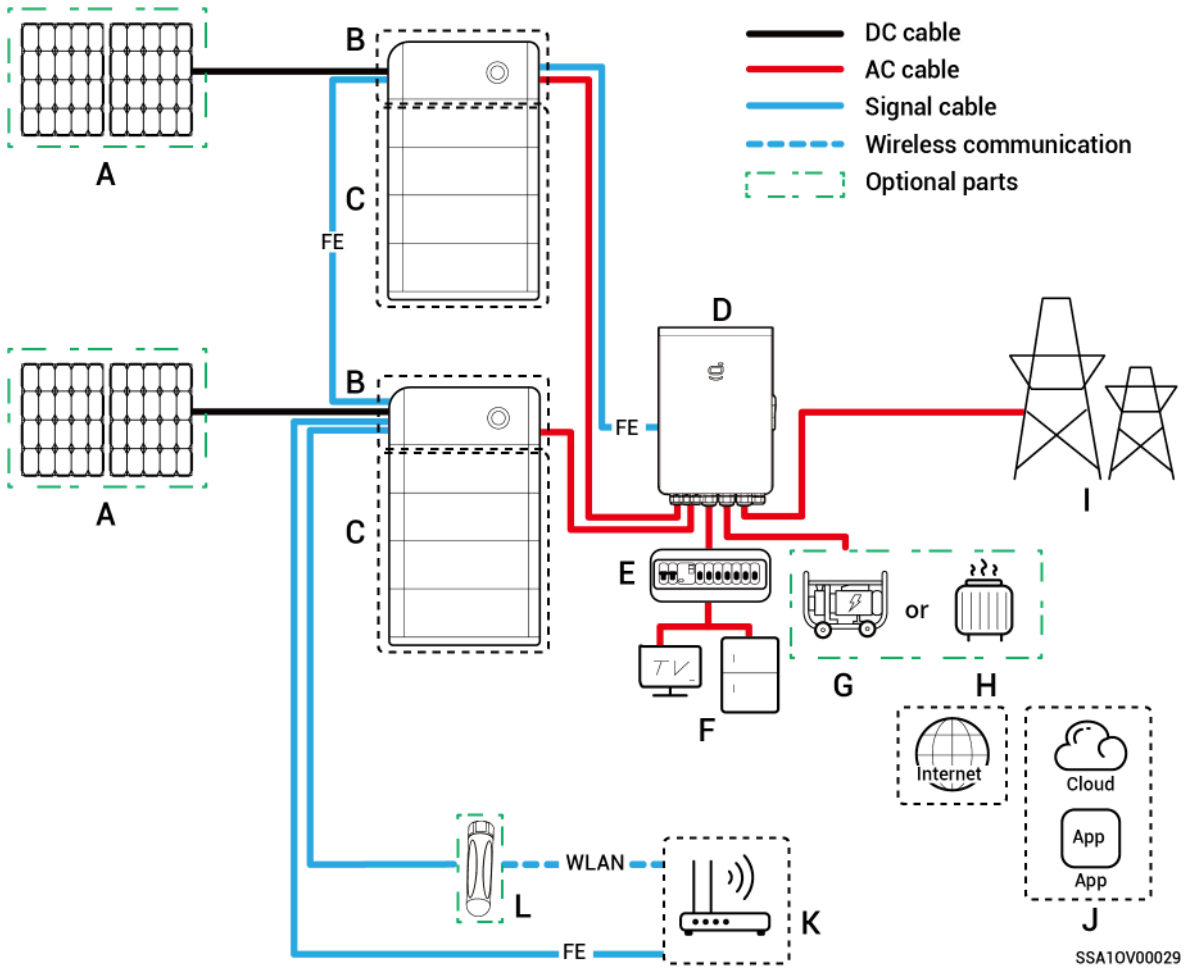

A. PV panel **B.** SigenStor EC/ Sigen Hybrid

C. SigenStor BAT **D.** Gateway **E.** Backup Distribution panel

F. Backup loads **G.** Diesel generator **H.** Smart loads

I. Power grid **J.** mySigen **K.** Router **L.** Antenna

Tips

- As a backup energy source for long-term off-grid applications, the diesel generator can work in tandem with the Gateway to provide a smooth transition between PV, storage and diesel generation.
- All the power equipment can be connected as smart loads. To ensure that this product maximizes the benefits to users, it is recommended that the high-power equipment be connected as smart loads (heat pumps, pool heaters, clothes dryers, etc.), which can be cut off when the energy storage system has low power. Other low-power equipment are

connected as loads (lights, routers, etc.)

Networking Diagram (Partial Home Backup)

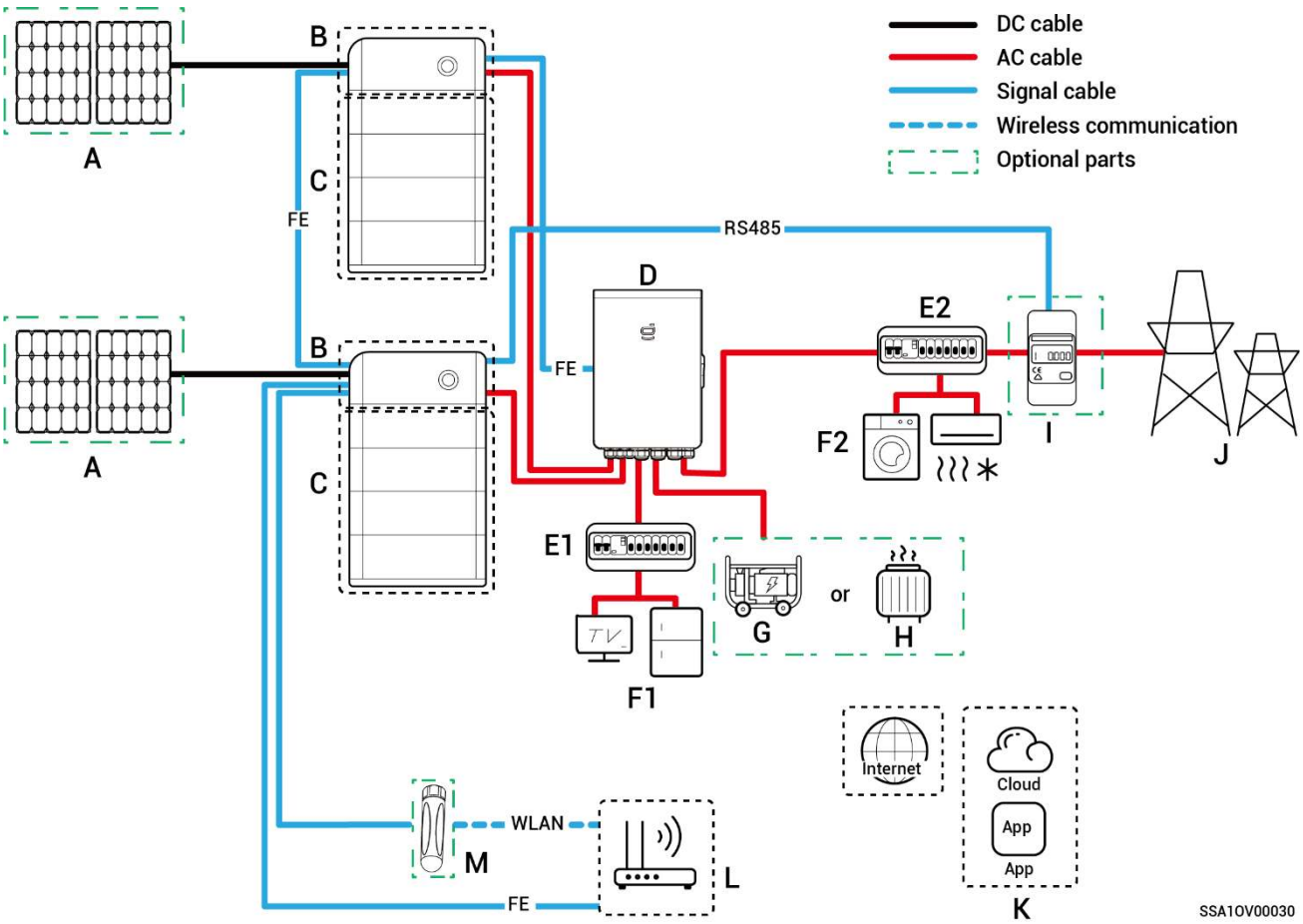

A. PV panel **B.** SigenStor EC/ Sigen Hybrid

C. SigenStor BAT **D.** Gateway **E1.** Backup Distribution panel

E2. Non-Backup Distribution panel **F1**. Backup loads

F2. Non-Backup loads **G.** Diesel Generator

H. Smart loads **I.** Power sensor **J.** Power grid **K.** mySigen

L. Router **M.** Antenna

Tips

- As a backup energy source for long-term off-grid applications, the diesel generator can work in tandem with the Gateway to provide a smooth transition between PV, storage and diesel power generation.

- All the power equipment can be connected as smart loads. To ensure that this product maximizes the benefits to users, it is recommended that the high-power equipment be connected as smart loads (heat pumps, pool heaters, clothes dryers, etc.), which can be cut off when the energy storage system has low power. Other low-power equipment are connected as loads (lights, routers, etc.)
- Power sensor has the function of data acquisition for grid connection points enables zero-power grid connection. For partial home backup, Power sensor does not need to be configured. For partial backup power and zero-power grid connection control networking, Power sensor is configured.

Networking Diagram (Non-backup Networking)

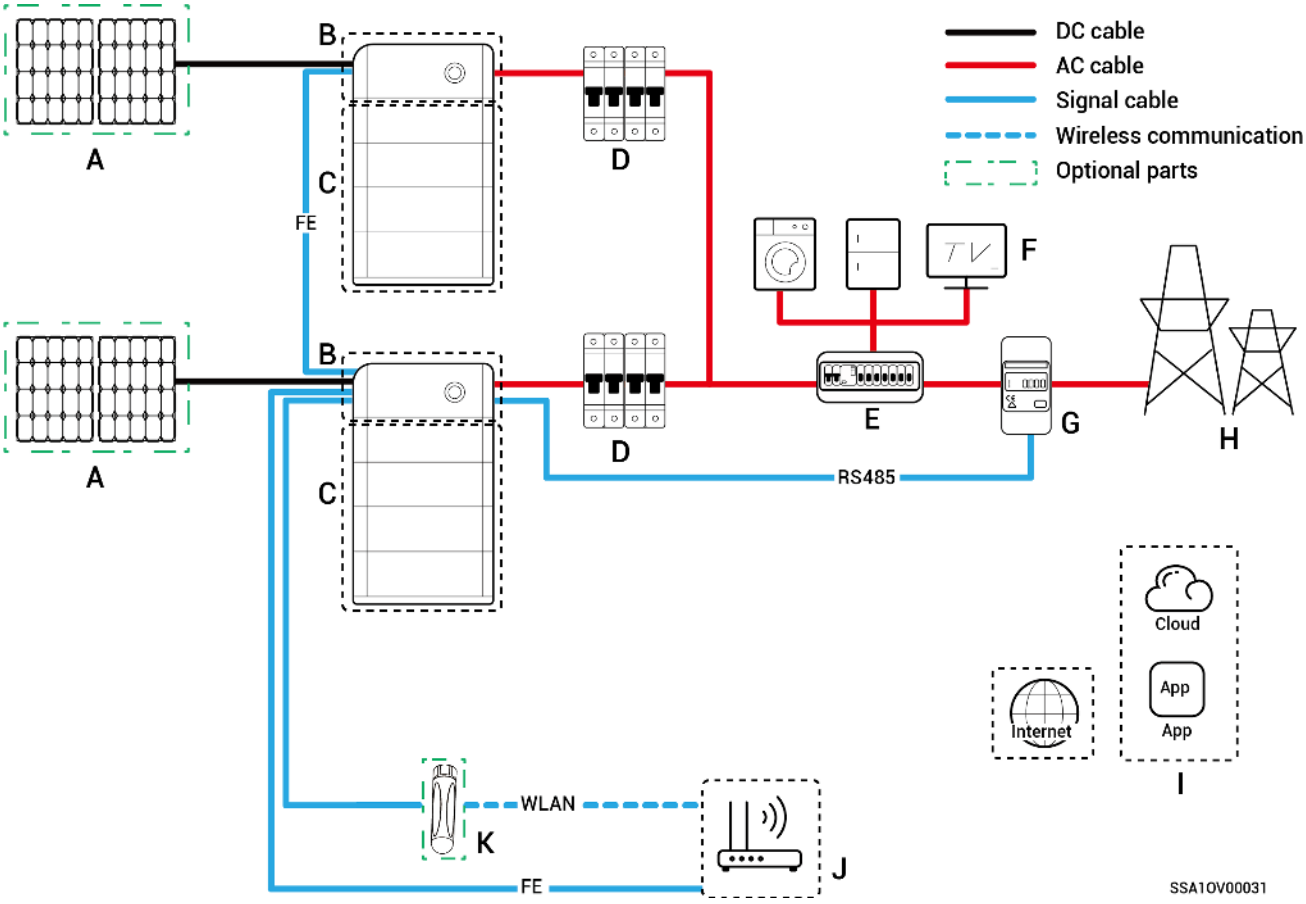

A. PV panel	**B.** SigenStor EC/Sigen Hybrid	**C.** SigenStor BAT

D. AC switch **E.** Distribution panel **F.** Loads

G. Power sensor **H.** Power grid **I.** mySigen **J.** Router

K. Antenna

Tips

- When B is Sigen Hybrid, A is optional.
- The rated voltage of the AC switch connected to each inverter should be ≥ 230 Va.c., and the rated current is recommended:
  - SigenStor EC/Sigen Hybrid (5.0, 6.0) TPLV: The rated current is 25 A
  - SigenStor EC/Sigen Hybrid 8.0 TPLV: The rated current is 32 A
  - SigenStor EC/Sigen Hybrid 10.0 TPLV: The rated current is 40 A
  - SigenStor EC/Sigen Hybrid 12.0 TPLV: The rated current is 50 A
- The rated voltage of the AC switch of the distribution panel should be not less than 230 Va.c., and the rated current is recommended, that is, not less than the maximum output current of an inverter × the number of inverters in parallel connection × 1.25[1].

Note [1]: The maximum output current of an inverter can be found in its respective data sheet.

Chapter 3 Site Selection Requirements

Tips

- The warranty applies when the equipment has been installed properly for its intended use and in accordance with the operating instructions.
- During actual installation, the selection of installation location should comply with local firefighting, environmental protection regulations, and other relevant laws. The specific installation location planning should be subject to the installer or engineering, procurement, and construction (EPC) contracts.

Installation Environment Requirements

- Do not install the equipment in smoky, flammable, or explosive environments.
- Do not install the equipment in an environment with conductive metal dust or magnetic dust.
- Do not install the equipment in an environment that is prone to mold and fungi.
- Avoid exposing the equipment to direct sunlight, rain, standing water, snow, or dust. Install the equipment in a sheltered place. Take preventive measures in operating areas prone to natural disasters such as floods, mudslides, earthquakes, and typhoons.
- Do not install the equipment in an environment with strong electromagnetic interference.
- Ensure that the temperature and humidity of the installation environment comply with the equipment's requirements.
- The equipment should be installed in an area that is at least 1640.42 ft (500 m) away from corrosion sources that may result in salt damage or acid damage (corrosion sources include but are not limited to seaside, thermal power plants, chemical plants, smelters, coal plants, rubber plants, and electroplating plants).

Installation Position Requirements

- Do not tilt or overturn the equipment to ensure that it is installed horizontally.
- Do not install the equipment in places with fire or damp.
- Do not install the equipment in a sealed, poorly ventilated location without fire protection measures and difficult access for firefighters.
- Do not install the equipment under water sources, including but not limited to water pipes and air conditioner outlet windows, where condensate or water leakage may occur. Otherwise, liquid may enter the equipment and cause short circuit.
- Do not install the equipment in mobile scenarios such as RVS, cruise ships, and trains.
- The equipment is hot when it is running. If the equipment is installed indoors, please ensure good indoor ventilation and avoid significant indoor temperature rise by 37.4°F (3°C) while the equipment is running. Otherwise, the equipment will be derated.
- The equipment generates heat when it is operating. Do not install the equipment in areas easily accessible to heat dissipation surfaces.
- You are advised to install the equipment in a location where you can easily access, install, operate, maintain it, and view the indicator status.
- The on-grid/off-grid switchover makes noise. It is recommended that the equipment be installed near the AC distribution box, away from the rest area.

Mounting Surface Requirements

- Do not install the equipment on a flammable installation base.
- The installation base should meet the load-bearing requirement and should be free of adverse geological conditions including but not limited to rubber soil and soft soil. Solid brick-concrete structures and concrete walls are recommended.
- The surface of the installation base must be smooth and the installation

area must meet the installation space requirements.

- No water or electricity is routed inside the installation base to prevent drilling hazards during equipment installation.

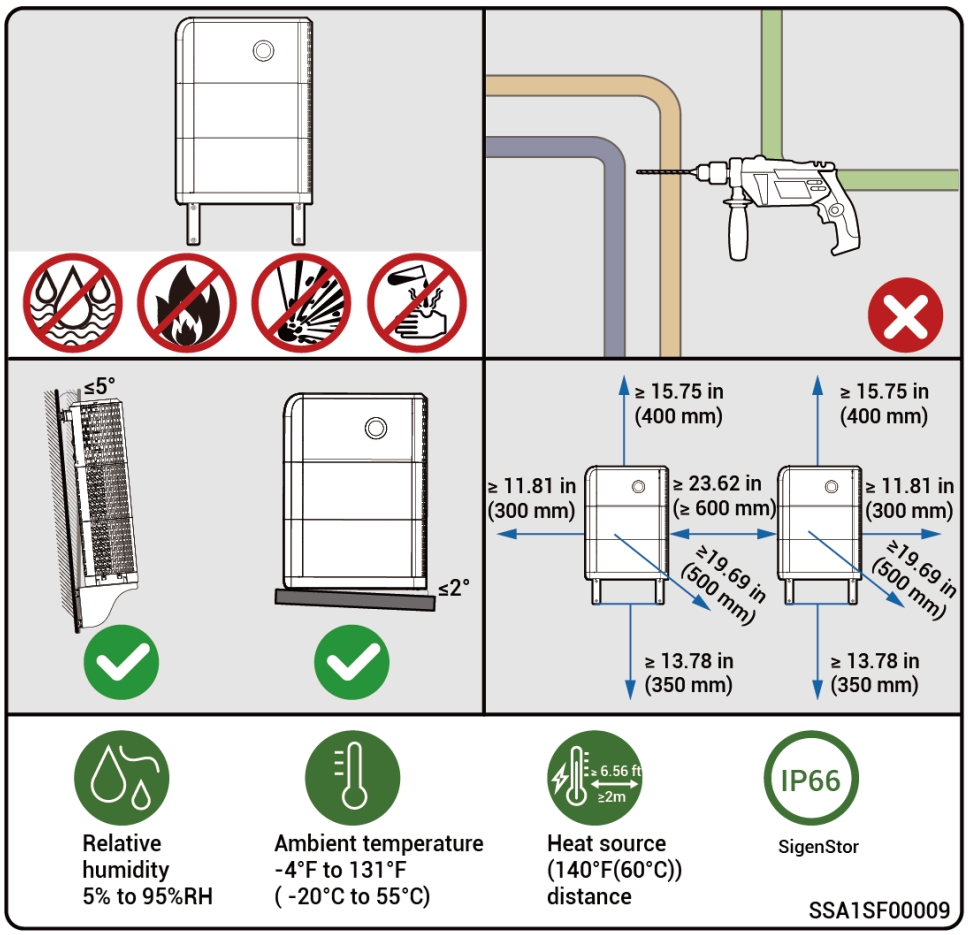

Tips

- The maximum operating temperature range applicable to the equipment is -4°F to 131°F (-20°C to 55°C), and the recommended optimal operating temperature range is 50°F ≤ T ≤ 95°F (10°C ≤ T ≤ 35°C).
- When the battery pack temperature is below 32°F (0°C), immediate charging is not possible, and the battery pack (the built-in heating module can be automatically enabled) will activate the heating feature automatically. The best charging performance of the battery can be achieved after heating for less than 2 h. The heating feature will consume power.
- At a temperature > 104°F (40°C), the operation of the equipment may trigger a power derating that prevents the equipment from operating optimally. The higher the temperature, the shorter the service life of the equipment.

Chapter 4 Equipment Installation and Wiring

- Only company authorized personnel should install and connect the equipment. For details, see ***SigenStor Installation Guide - Three-phase Low Voltage System***.
- Parts and accessories supplied with the packing box are personal assets of the owner and must be kept safe.

Chapter 5 System Operation

5.1 Working Mode

Tips

- There are five operating modes of the energy storage system: Sigen AI Mode, Self-Consumption Mode, Fully Fed to Grid Mode, Time-based Control Mode, Remote EMS Mode.
- Sigen AI Mode can be used in some countries, which is explicitly stated on the App interface.

Sigen AI Mode

In Sigen AI Mode, the system records data such as electricity usage, local peak-valley electricity price, and weather conditions and thus customizes smart electricity solutions to save electricity costs for customers to the maximum extent.

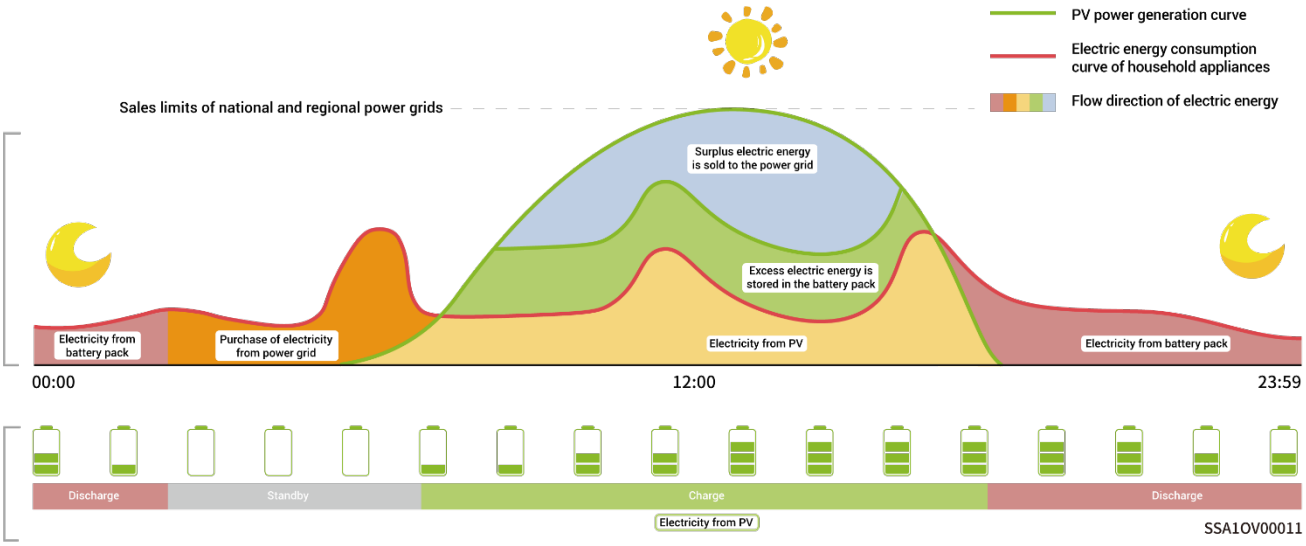

Self-Consumption Mode

When there is sufficient solar power, the electric energy generated by the PV system will first be used to power the loads, with any excess energy being stored

in the batteries. If there is still surplus energy, it will flow into the power grid. When there is insufficient solar power, the batteries will release electric energy to loads. By increasing the self-consumption ratio of the PV system and improving the self-sufficiency ratio of household energy, you can effectively save on your electric bills.

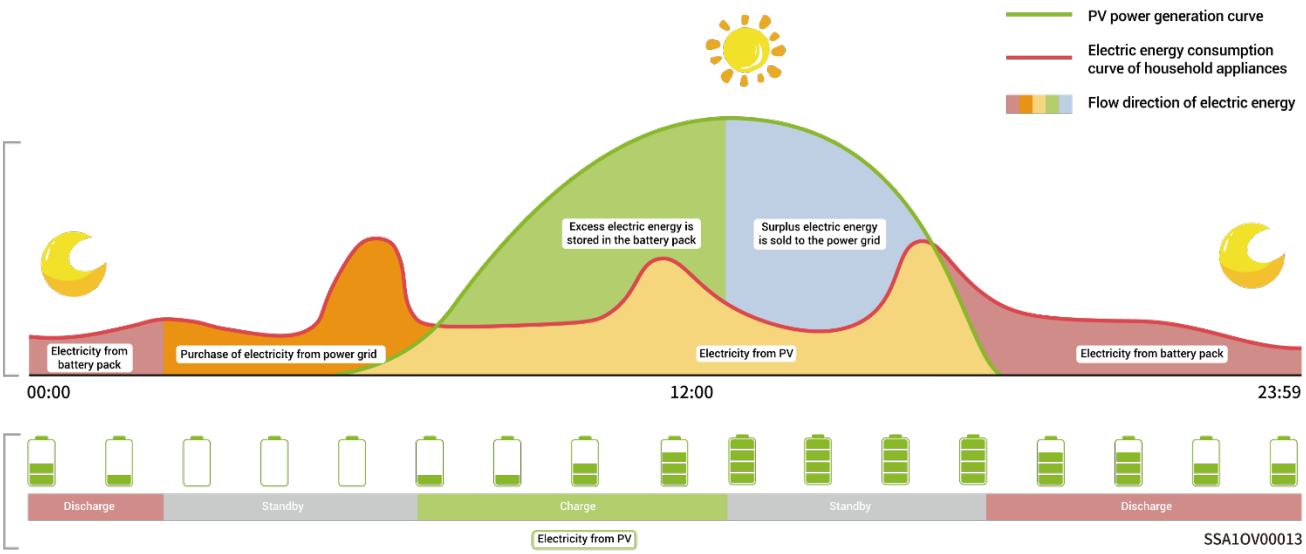

Fully Fed to Grid Mode

The PV power generation can be maximized for sale to the power grid. During the daytime when the PV-generated power is greater than maximum output capacity of the inverter, the inverter stays at maximum output while the excess electricity is stored in batteries; when the PV-generated power is lower than maximum output capacity of the inverter or when no PV power is generated at night, the batteries are discharged to ensure that the inverter can maximize the output.

Time-based Control Mode

In Time-based Control Mode, the charging period and discharge period should be manually set in the mySigen App, and the other periods are non-charging and non-discharging ones. The surplus electricity generated by PV during the day can be sold to the grid or charged to the battery, and the battery can be charged at night during the period of low electricity price of the grid to save electricity costs.

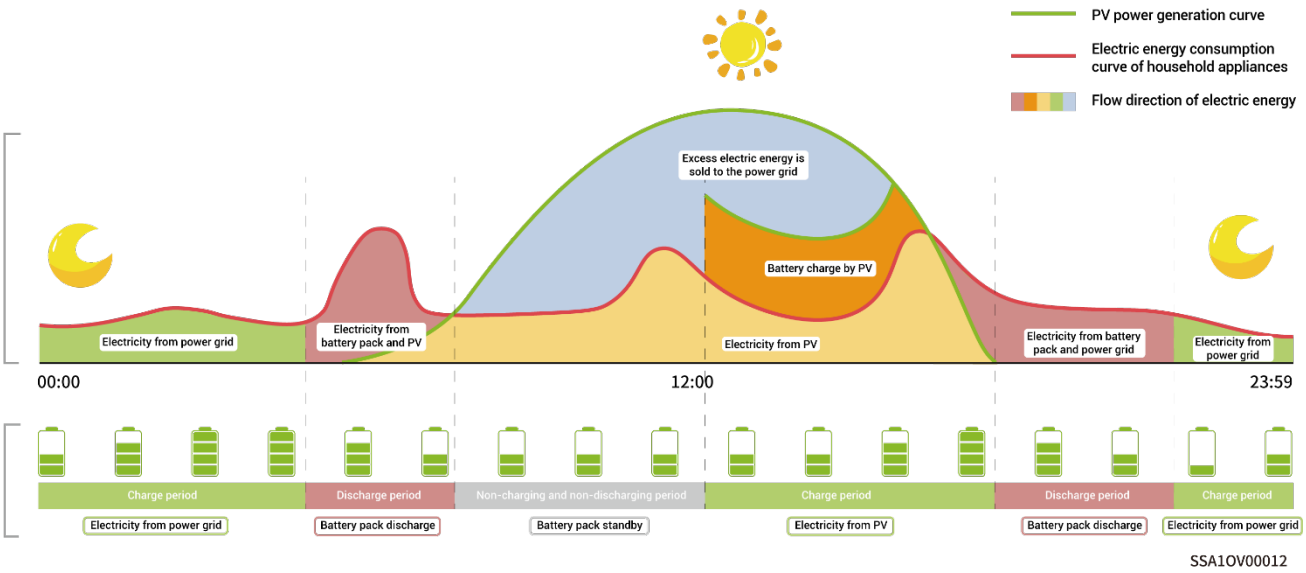

Remote EMS Mode

After setting to this mode, a third-party EMS dispatch company will be allowed to set the relevant parameters of the power station and products. Do not enter or exit this mode without the installer's confirmation.

Backup Reserve:

If there is a Gateway in the network, you can manually set the "Backup Reserve" value in mySigen App. When the grid is connected, the battery stops discharging when the set backup SOC is reached; when the grid is powered down, the battery power from the backup can be used.

Example: Self-Consumption Mode involves backup SOC.

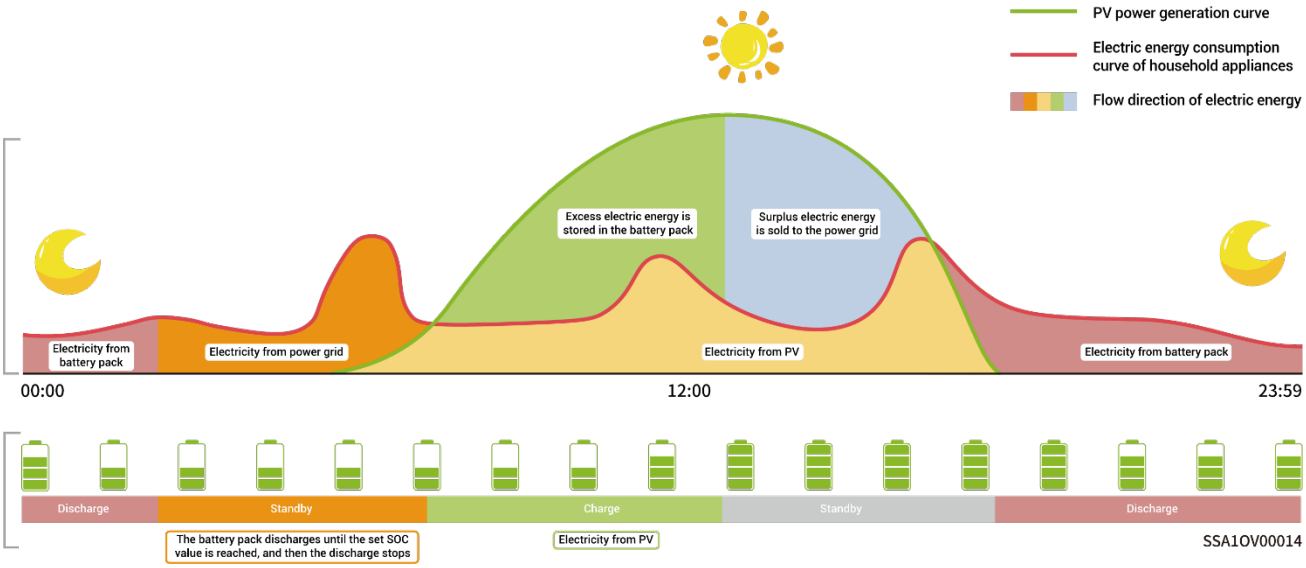
PV power generation curve
Electric energy consumption curve of household appliances
Flow direction of electric energy
Excess electric energy is stored in the battery pack
Surplus electric energy is sold to the power grid
Electricity from battery pack
Electricity from power grid
Electricity from PV
Electricity from battery pack
00:00
12:00
23:59

Discharge
Standby
Charge
Standby
Discharge
The battery pack discharges until the set SOC value is reached, and then the discharge stops
Electricity from PV
SSA1OV00014

5.2 LED Indicator State

SigenStor EC/Sigen Hybrid Indicator

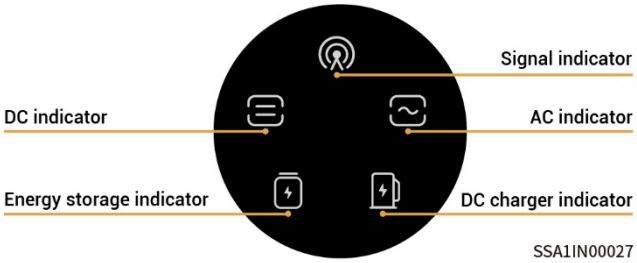

Indicator	Color	State	Description
		Always on	The DC side is connected but not running.
		Always on	The DC side is running.
		-	The DC side is not connected.
		Flash	The DC side is faulty.
		Always on	Inverter failure.
		Always on	The AC side is connected but not running.
		Always on	Grid-connected operation.
		-	The AC side is not connected.
		Flash	The AC side is faulty.
		Always on	Inverter failure.
		Always on	All SigenStor BATs are connected but not running.
		Flash	SigenStor BAT is charging.
		Flash	SigenStor BAT is discharging.
		-	All SigenStor BATs lie dormant.
		Flash	Some SigenStor BATs are faulty.
		Always on	All SigenStor BATs are faulty.
		Off	The management system is not connected.
		Flash	Connected to local App.

Indicator	Color	State	Description
		Always on	Connected to the management system using an FE or WLAN.
		Always on	Connected to the management system over 4G.
		Flash	Insufficient traffic for Sigen CommMod.

5.3 mySigen App Query

The App can be downloaded in the following two ways. For details, see ***mySigen App User Manual*** and ***mySigen App Installer Manual***.

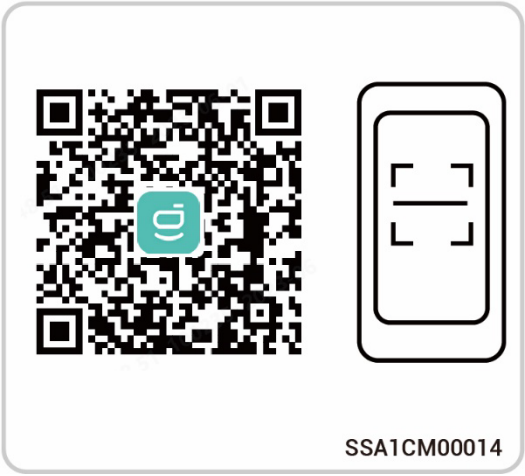

Chapter 6 System Maintenance

6.1 Routine Maintenance

To ensure the long-term operating of the equipment, you are advised to perform routine maintenance according to this section.

Inspection content	Inspection method	Power off or not	Maintenance cycle
System cleaning	Regularly check whether the decorative cover or fan is covered and dirty. Clean it up when necessary. Do not use tools that may cause electric shock or with damaged insulation when cleaning up, such as wire brushes.	Yes	Once every 3 months.
System operating state	● Check whether the equipment is damaged or deformed. ● Listen for any abnormal noises during the operation of the equipment. ● When the equipment is running, check whether the equipment parameters are correctly set.	No	Once every 6 months.

Electrical connection	● Check whether cable terminals are tightly connected. ● Check whether cable sheath is damaged. ● Check whether scratches exist on the surface where the cable contacts the metal. ● Check whether unused routing holes are sealed.	Yes	Check once every 6 months after creating new systems and once every 6 to 12 months thereafter.
Grounding reliability	Check whether the ground cable is properly and reliably connected.	No	Check once every 6 months after creating new systems and once every 6 to 12 months thereafter.

6.2 Equipment Powering-on/Power-off

Scheme 1: App operation

Owner's account

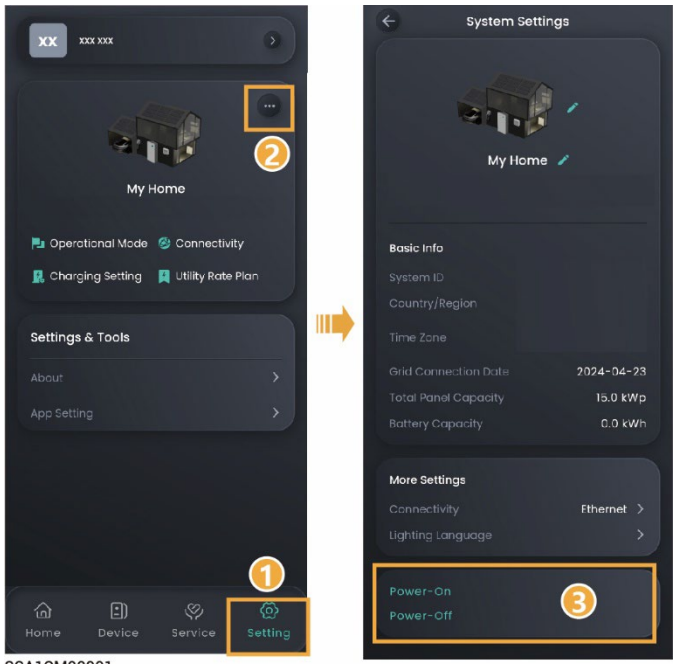

SSA1CM00001

Installer's account

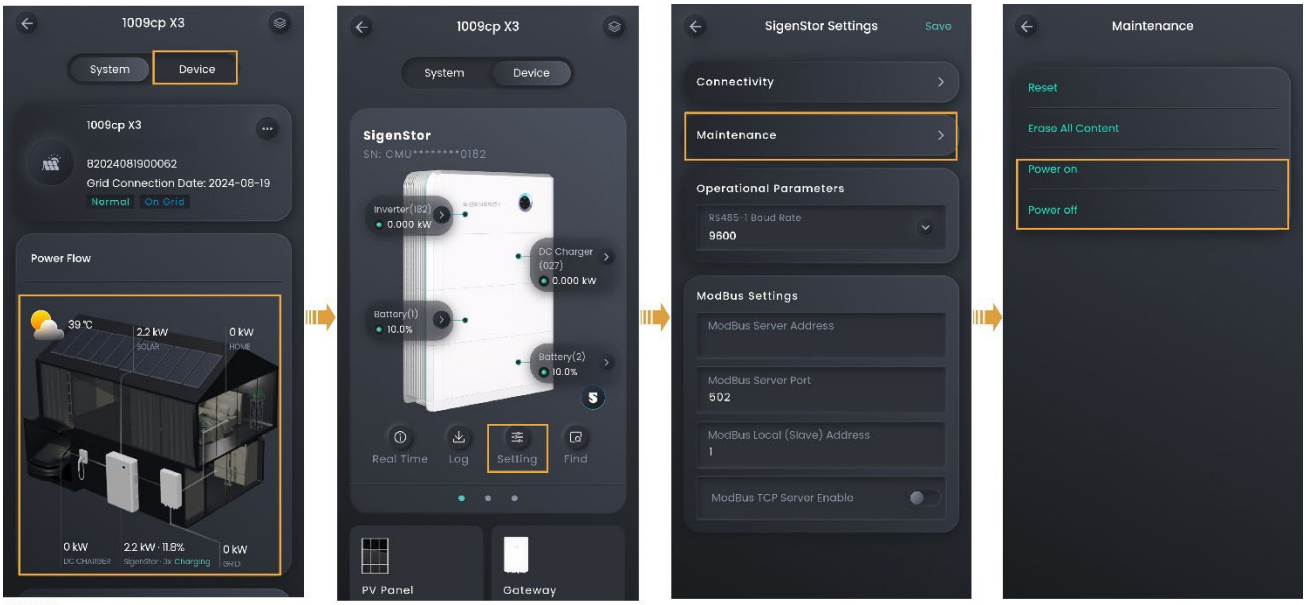

MSA1CM00056

Scheme 2: Manual operation

Follow the steps shown to remove the side and top decorative cover, and press the ON/OFF switch button.

Tips

- Press and hold for more than 3s to turn on or off the power; an interval of more than 10s is needed between power-on and power-off.
- If the equipment is powered off using this method, you must power the equipment on using this method.

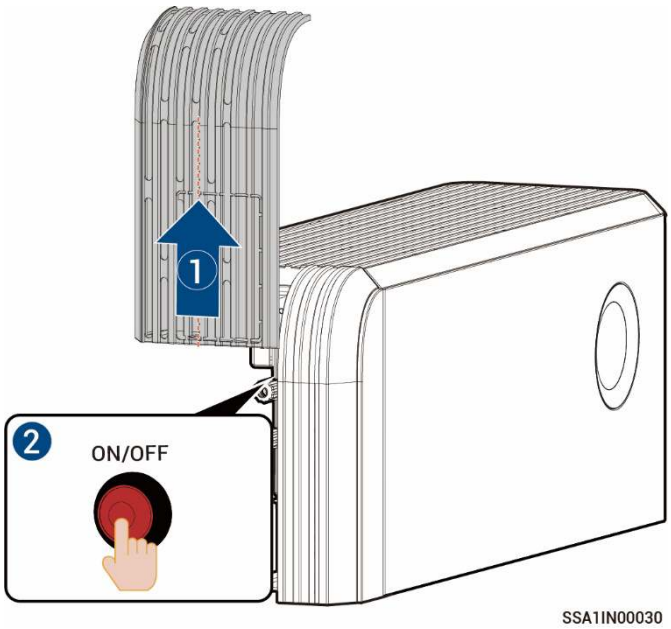

Tips

Major firmware upgrades can fail if the equipment is not connected to the internet for an extended period of time. When your equipment is not connected to the internet, the system will send you a reminder repeatedly. If the system does not receive feedback from you for a long time, the system will operate under limited conditions for security reasons. If you want to make the equipment fully functional, connect the equipment to the internet. The system will automatically restore its functionality. If you have further questions, please contact us for assistance.

6.3 Low SOC

The self-discharge characteristic of battery pack will cause power loss. If the equipment is not charged for a long time, it may be damaged due to overdischarge of power. When the battery is low, charge the equipment in time. Under normal circumstances, the equipment can charge itself according to the running condition. If the equipment cannot be charged, please contact your sales agent in time and deal with it within the specified time. If the battery capacity is lost or irreversible damage is caused due to the delay, the company will not be liable.

- When the battery power is greater than or equal to 10%, charge within 30 days
- When the battery power is less than or equal to 0% and less than 10%, charge within 7 days

Scenarios that may cause a charge failure (including but not limited to):

- The PV side has no input, and the power grid side is powered off for a long time.
- The equipment is faulty.
- Parameters are not set correctly.
- Battery undervoltage.

6.4 Emergency Treatment

Emergency in case of Fire

Danger

- Please shut down the equipment or disconnect the main power switch when it is safe.
- The high temperature may distort or damage the battery pack, resulting in electrolyte overflow or toxic gas leakage. Do not go near the battery pack and wear protective equipment.
- If the fire is small, use carbon dioxide or ABC dry powder extinguisher to extinguish the fire.
- If the fire is spreading, evacuate the building or equipment area immediately and call the fire department. Re-entry to burning buildings is prohibited.
- Do not touch or come into contact with high voltage components during fire fighting, due to the risk of electric shock.
- After extinguishing the fire, do not use the equipment, please contact your installer or sales representative.

Emergency in case of Flood

Danger

- Please shut down the equipment or disconnect the main power switch when it is safe.
- If the battery pack is submerged, do not touch it to avoid the danger of electric shock.
- After the flood waters recede, do not use the equipment. Please contact your installer or sales representative.

Emergency in case of Battery Pack Malfunctions

Danger

- When the battery pack has abnormal odor, electrolyte leakage, or heat, do not touch it, and contact professional personnel immediately. Professionals must wear protective equipment such as goggles, rubber gloves, gas masks, and protective clothing to protect themselves.
- The electrolyte is corrosive and contact may cause skin irritation or chemical burns. In case of accidental contact with the electrolyte, take the following measures immediately:
  - Inhalation: Evacuate the contaminated area, keep fresh air circulating, and seek immediate medical help.
  - Eye contact: Flush eyes with plenty of water for at least 15 minutes. Do not rub eyes. Seek medical help immediately.
  - Skin contact: Wash the contact area with plenty of soapy water and seek medical help immediately.
  - Ingestion: Induce vomiting and seek medical help immediately.
- Do not continue to use abnormal battery packs, please contact your installer or sales representative.

Emergency in case of Battery Pack Drops or Impacts

- If there is an obvious odor, smoke, or fire, keep away from the equipment immediately and contact professional personnel.
- Do not use the battery pack if it has been dropped or hit. Please contact your installer or sales representative.

Chapter 7 Appendix

7.1 Technical Parameter

For details about equipment parameters, see the Data sheets of the product.