SUN2000-(3KTL-10KTL)-M1

User Manual

Issue	28
Date	2026-03-30

HUAWEI DIGITAL POWER TECHNOLOGIES CO., LTD.

Copyright © Huawei Digital Power Technologies Co., Ltd. 2026. All rights reserved.

No part of this document may be reproduced or transmitted in any form or by any means without prior written consent of Huawei Digital Power Technologies Co., Ltd.

Trademarks and Permissions

HUAWEI and other Huawei trademarks are the property of Huawei Technologies Co., Ltd.
All other trademarks and trade names mentioned in this document are the property of their respective holders.

Notice

The purchased products, services and features are stipulated by the contract made between Huawei Digital Power Technologies Co., Ltd. and the customer. All or part of the products, services and features described in this document may not be within the purchase scope or the usage scope. Unless otherwise specified in the contract, all statements, information, and recommendations in this document are provided "AS IS" without warranties, guarantees or representations of any kind, either express or implied. The information in this document is subject to change without notice. Every effort has been made in the preparation of this document to ensure accuracy of the contents, but all statements, information, and recommendations in this document do not constitute a warranty of any kind, express or implied.

Huawei Digital Power Technologies Co., Ltd.

Address: Huawei Digital Power Antuoshan Headquarters
Futian, Shenzhen 518043
People's Republic of China

Website: https://digitalpower.huawei.com

More Information

Huawei Digital Power Information Experience Center

https://info.support.huawei.com/Energy/info

About This Document

Purpose

This document describes the SUN2000-5KTL-M1, SUN2000-6KTL-M1, SUN2000-8KTL-M1, SUN2000-10KTL-M1, SUN2000-10KTL-BEM1, and SUN2000-12KTL-M1 (SUN2000 for short) in terms of their installation, electrical connections, commissioning, maintenance, and troubleshooting. Before installing and operating the inverter, ensure that you are familiar with the features, functions, and safety precautions provided in this document.

NOTE

The SUN2000-8KTL-M1, SUN2000-10KTL-M1, SUN2000-10KTL-BEM1, and SUN2000-12KTL-M1 are not applicable to Australia.

The SUN2000-5/6/8/10/12KTL-M1 are intended for sales in China. These models cannot work properly outside China.

Statement

In this document, LUNA only refers to a specific model of Huawei Smart String ESS.

Intended Audience

This document is intended for:

- Installers
- Users

Symbol Conventions

The symbols that may be found in this document are defined as follows.

Symbol	Description
DANGER	Indicates a hazard with a high level of risk which, if not avoided, will result in death or serious injury.

 Copyright © Huawei Digital Power Technologies Co., Ltd.

Symbol	Description
WARNING	Indicates a hazard with a medium level of risk which, if not avoided, could result in death or serious injury.
CAUTION	Indicates a hazard with a low level of risk which, if not avoided, could result in minor or moderate injury.
NOTICE	Indicates a potentially hazardous situation which, if not avoided, could result in equipment damage, data loss, performance deterioration, or unanticipated results. NOTICE is used to address practices not related to personal injury.
NOTE	Supplements the important information in the main text. NOTE is used to address information not related to personal injury, equipment damage, and environment deterioration.

Change History

Changes between document issues are cumulative. The latest document issue contains all the changes made in earlier issues.

Issue 28 (2026-03-30)

- Updated **1.2 Electrical Safety**.
- Updated **2.1 Product Introduction**.
- Updated **5.8.6 Connecting RS485 Communications Cables (Smart Guard)**.
- Updated **7.1 Device Commissioning**.
- Updated the app name.
- Updated the name of the Smart Guard.

Issue 27 (2025-12-30)

- Added **Statement**.
- Updated **4.5 Installing the Mounting Bracket**.
- Updated **5.2 Installation Preparation**.
- Updated **10.1 SUN2000 Technical Specifications**.

Issue 26 (2025-09-30)

- Changed "Energy Management Assistant" to "SmartAssistant" throughout the document.
- Updated **2.1 Product Introduction**.
- Updated **5.8 (Optional) Connecting Signal Cables**.
- Updated **5.8.7 Connecting the Grid Scheduling Signal Cable**.

Issue 25 (2025-08-15)

Updated **10.1 SUN2000 Technical Specifications**.

Issue 24 (2025-07-25)

- Updated **2.3.2 Product Nameplate**.
- Updated **5.2 Installation Preparation**.
- Updated **5.7 (Optional) Installing the Smart Dongle and Anti-theft Components**.
- Updated **5.8.2 Connecting the RS485 Communications Cable (Smart Power Sensor)**.
- Updated **5.8.7 Connecting the Grid Scheduling Signal Cable**.
- Updated **10.1 SUN2000 Technical Specifications**.

Issue 23 (2025-07-01)

- Updated **2.1 Product Introduction**.
- Updated **2.3.2 Product Nameplate**.

Issue 22 (2025-05-08)

- Updated **2.1 Product Introduction**.

Issue 21 (2025-04-22)

- Updated **5.2 Installation Preparation**.

Issue 20 (2025-01-10)

- Updated **2.1 Product Introduction**.
- Updated **5.2 Installation Preparation**.
- Updated **5.8 (Optional) Connecting Signal Cables**.
- Added **5.8.4 Connecting RS485 Communications Cables (SmartAssistant)**.
- Added **5.8.5 Connecting RS485 Communications Cables (SmartAssistant and Battery)**.
- Added **5.8.6 Connecting RS485 Communications Cables (Smart Guard)**.
- Updated **7 Power-On and Commissioning**.
- Updated **10.1 SUN2000 Technical Specifications**.
- Updated **A Grid Code**.

Issue 19 (2024-09-06)

Updated **A Grid Code**.

Issue 18 (2024-06-24)

Deleted "Locating Insulation Resistance Faults."

Issue 17 (2024-01-12)

- Updated **5.2 Installation Preparation**.
- Updated **5.8.2 Connecting the RS485 Communications Cable (Smart Power Sensor)**.
- Updated **8.3 Troubleshooting**.
- Updated **10.1 SUN2000 Technical Specifications**.
- Updated **A Grid Code**.

Issue 16 (2023-11-02)

Updated **5.4 Connecting the AC Output Power Cable**.

Issue 15 (2023-09-20)

Updated **7 Power-On and Commissioning**.

Issue 14 (2023-09-06)

Updated **A Grid Code**.

Issue 13 (2023-08-23)

Updated **C Rapid Shutdown**.

Issue 12 (2023-07-30)

- Updated **About This Document**.
- Updated **2.1 Product Introduction**.
- Updated **5.2 Installation Preparation**.
- Updated **10.1 SUN2000 Technical Specifications**.

Issue 11 (2023-04-07)

- Updated **5.8.9 Connecting NS Protection Signal Cables**.
- Updated **A Grid Code**.

Issue 10 (2022-12-29)

- Updated **2.1 Product Introduction**.
- Updated **5.8.9 Connecting NS Protection Signal Cables**.

Issue 09 (2022-10-10)

- Updated **5.2 Installation Preparation**.
- Updated **5.4 Connecting the AC Output Power Cable**.

Issue 08 (2022-06-30)

- Updated **5.2 Installation Preparation**.
- Updated **7 Power-On and Commissioning**.

- Updated **10.1 SUN2000 Technical Specifications**.
- Updated **A Grid Code**.

Issue 07 (2022-03-04)

- Updated **5.8.2 Connecting the RS485 Communications Cable (Smart Power Sensor)**.
- Updated **B Resetting Password**.
- Updated **C Rapid Shutdown**.

Issue 06 (2021-12-20)

Updated **7 Power-On and Commissioning**.

Updated **10.1 SUN2000 Technical Specifications**.

Issue 05 (2021-11-24)

Updated **10.1 SUN2000 Technical Specifications**.

Issue 04 (2021-08-10)

- Updated **2.1 Product Introduction**.
- Updated **5.5 Installing DC Input Power Cables**.
- Updated **5.6 (Optional) Connecting Battery Cables**.
- Updated **5.8 (Optional) Connecting Signal Cables**.
- Updated **7 Power-On and Commissioning**.

Issue 03 (2020-02-01)

- Updated **4.3.2 Space Requirements**.
- Updated **5.8.2 Connecting the RS485 Communications Cable (Smart Power Sensor)**.
- Updated **6.2 SUN2000 power-on**.
- Updated **8.3 Troubleshooting**.

Issue 02 (2020-11-20)

Updated **7 Power-On and Commissioning**.

Issue 01 (2020-09-30)

This issue is used for first office application (FOA).

Contents

About This Document ii

1 Safety Information 1

1.1 Personal Safety 2
1.2 Electrical Safety 4
1.3 Environment Requirements 7
1.4 Mechanical Safety 9

2 Overview 13

2.1 Product Introduction 13
2.2 Appearance 17
2.3 Label Description 20
2.3.1 Enclosure Labels 20
2.3.2 Product Nameplate 21
2.4 Working Principles 21
2.4.1 Circuit Diagram 21
2.4.2 Working Modes 22

3 Storage 24

4 Installation 25

4.1 Checking Before Installation 25
4.2 Tools 26
4.3 Determining the Installation Position 27
4.3.1 Environment Requirements 27
4.3.2 Space Requirements 28
4.4 Moving the SUN2000 31
4.5 Installing the Mounting Bracket 31
4.5.1 Wall-mounted Installation 32
4.5.2 Support Mounting 34

5 Electrical Connections 38

5.1 Precautions 38
5.2 Installation Preparation 39
5.3 Connecting the PE cable 43
5.4 Connecting the AC Output Power Cable 45

5.5 Installing DC Input Power Cables....49
5.6 (Optional) Connecting Battery Cables....52
5.7 (Optional) Installing the Smart Dongle and Anti-theft Components....54
5.8 (Optional) Connecting Signal Cables....56
5.8.1 Connecting the RS485 Communications Cable (Inverter Cascading)....61
5.8.2 Connecting the RS485 Communications Cable (Smart Power Sensor)....62
5.8.3 Connecting an RS485 Communications Cable (Between a Power Meter and a Battery)....67
5.8.4 Connecting RS485 Communications Cables (SmartAssistant)....68
5.8.5 Connecting RS485 Communications Cables (SmartAssistant and Battery)....69
5.8.6 Connecting RS485 Communications Cables (Smart Guard)....70
5.8.7 Connecting the Grid Scheduling Signal Cable....71
5.8.8 Connecting a Signal Cable to the Smart Backup Box....72
5.8.9 Connecting NS Protection Signal Cables....74

6 Commissioning....77
6.1 Checking Before Power-On....77
6.2 SUN2000 power-on....78

7 Power-On and Commissioning....85
7.1 Device Commissioning....85
7.2 SmartLogger Networking Scenario....86
7.2.1 DRM (Australia AS4777)....87

8 System Maintenance....89
8.1 SUN2000 Power-Off....89
8.2 Routine Maintenance....90
8.3 Troubleshooting....91

9 Handling the Inverter....92
9.1 Removing the SUN2000....92
9.2 Packing the SUN2000....92
9.3 Disposing of the SUN2000....92

10 Technical Specifications....93
10.1 SUN2000 Technical Specifications....93
10.2 Optimizer Technical Specifications....101

A Grid Code....104

B Resetting Password....107

C Rapid Shutdown....108

D Acronyms and Abbreviations....109

1 Safety Information

Statement

Before transporting, storing, installing, operating, using, and/or maintaining the equipment, read this document, strictly follow the instructions provided herein, and follow all the safety instructions on the equipment and in this document. In this document, "equipment" refers to the products, software, components, spare parts, and/or services related to this document; "the Company" refers to the manufacturer (producer), seller, and/or service provider of the equipment; "you" refers to the entity that transports, stores, installs, operates, uses, and/or maintains the equipment.

The **Danger**, **Warning**, **Caution**, and **Notice** statements described in this document do not cover all the safety precautions. You also need to comply with relevant international, national, or regional standards and industry practices. **The Company shall not be liable for any consequences that may arise due to violations of safety requirements or safety standards concerning the design, production, and usage of the equipment.**

The equipment shall be used in an environment that meets the design specifications. Otherwise, the equipment may be faulty, malfunctioning, or damaged, which is not covered under the warranty. The Company shall not be liable for any property loss, personal injury, or even death caused thereby.

Comply with applicable laws, regulations, standards, and specifications during transportation, storage, installation, operation, use, and maintenance.

Do not perform reverse engineering, decompilation, disassembly, adaptation, implantation, or other derivative operations on the equipment software. Do not study the internal implementation logic of the equipment, obtain the source code of the equipment software, violate intellectual property rights, or disclose any of the performance test results of the equipment software.

The Company shall not be liable for any of the following circumstances or their consequences:

- The equipment is damaged due to force majeure such as earthquakes, floods, volcanic eruptions, debris flows, lightning strikes, fires, wars, armed conflicts, typhoons, hurricanes, tornadoes, and other extreme weather conditions.
- The equipment is operated beyond the conditions specified in this document.

 Copyright © Huawei Digital Power Technologies Co., Ltd.

- The equipment is installed or used in environments that do not comply with international, national, or regional standards.
- The equipment is installed or used by unqualified personnel.
- You fail to follow the operation instructions and safety precautions on the product and in the document.
- You remove or modify the product or modify the software code without authorization.
- You or a third party authorized by you cause the equipment damage during transportation.
- The equipment is damaged due to storage conditions that do not meet the requirements specified in the product document.
- You fail to prepare materials and tools that comply with local laws, regulations, and related standards.
- The equipment is damaged due to your or a third party's negligence, intentional breach, gross negligence, or improper operations, or other reasons not related to the Company.

1.1 Personal Safety

DANGER

Ensure that power is off during installation. Do not install or remove a cable with power on. Transient contact between the core of the cable and the conductor will generate electric arcs or sparks, which may cause a fire or personal injury.

DANGER

Non-standard and improper operations on the energized equipment may cause fire, electric shocks, or explosion, resulting in property damage, personal injury, or even death.

DANGER

Before operations, remove conductive objects such as watches, bracelets, bangles, rings, and necklaces to prevent electric shocks.

DANGER

During operations, use dedicated insulated tools to prevent electric shocks or short circuits. The dielectric withstanding voltage level must comply with local laws, regulations, standards, and specifications.

 Copyright © Huawei Digital Power Technologies Co., Ltd.

WARNING

During operations, wear personal protective equipment such as protective clothing, insulated shoes, goggles, safety helmets, and insulated gloves.

Figure 1-1 Personal protective equipment

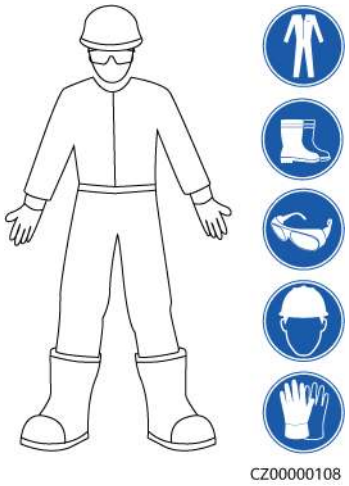

General Requirements

- Do not stop protective devices. Pay attention to the warnings, cautions, and related precautionary measures in this document and on the equipment.
- If there is a likelihood of personal injury or equipment damage during operations, immediately stop, report the case to the supervisor, and take feasible protective measures.
- Do not power on the equipment before it is installed or confirmed by professionals.
- Do not touch the power supply equipment directly or with conductors such as damp objects. Before touching any conductor surface or terminal, measure the voltage at the contact point to ensure that there is no risk of electric shock.
- Do not touch operating equipment because the enclosure is hot.
- Do not touch a running fan with your hands, components, screws, tools, or boards. Otherwise, personal injury or equipment damage may occur.
- In the case of a fire, immediately leave the building or the equipment area and activate the fire alarm or call emergency services. Do not enter the affected building or equipment area under any circumstances.

Personnel Requirements

- Only professionals and trained personnel are allowed to operate the equipment.
  - Professionals: personnel who are familiar with the working principles and structure of the equipment, trained or experienced in equipment operations and are clear of the sources and degree of various potential hazards in equipment installation, operation, maintenance

  - Trained personnel: personnel who are trained in technology and safety, have required experience, are aware of possible hazards on themselves in certain operations, and are able to take protective measures to minimize the hazards on themselves and other people
- Personnel who plan to install or maintain the equipment must receive adequate training, be able to correctly perform all operations, and understand all necessary safety precautions and local relevant standards.
- Only qualified professionals or trained personnel are allowed to install, operate, and maintain the equipment.
- Only qualified professionals are allowed to remove safety facilities and inspect the equipment.
- Personnel who will perform special tasks such as electrical operations, working at heights, and operations of special equipment must possess the required local qualifications.
- Only authorized professionals are allowed to replace the equipment or components (including software).
- Only personnel who need to work on the equipment are allowed to access the equipment.

1.2 Electrical Safety

DANGER

Before connecting cables, ensure that the equipment is intact. Otherwise, electric shocks or fire may occur.

DANGER

Non-standard and improper operations may result in fire or electric shocks.

DANGER

Prevent foreign matter from entering the equipment during operations. Otherwise, equipment short-circuits or damage, load power derating, power failure, or personal injury may occur.

WARNING

For the equipment that needs to be grounded, install the ground cable first when installing the equipment and remove the ground cable last when removing the equipment.

 Copyright © Huawei Digital Power Technologies Co., Ltd.

WARNING

During the installation of PV strings and the inverter, the positive or negative terminals of PV strings may be short-circuited to ground if the power cables are not properly installed or routed. In this case, an AC or DC short circuit may occur and damage the inverter. The resulting device damage is not covered under any warranty.

CAUTION

Do not route cables near the air intake or exhaust vents of the equipment.

CAUTION

The components (such as power distribution boxes, circuit breakers, and cables) used for electrical connections shall comply with fire resistance and flame retardance standards (such as IEC 60670-1). The materials and structure shall meet fire safety requirements.

General Requirements

- Follow the procedures described in the document for installation, operation, and maintenance. Do not reconstruct or alter the equipment, add components, or change the installation sequence without permission.
- Obtain approval from the national or local electric utility company before connecting the equipment to the grid.
- Observe the power plant safety regulations, such as the operation and work ticket mechanisms.
- Install temporary fences or warning ropes and hang "No Entry" signs around the operation area to keep unauthorized personnel away from the area.
- Before installing or removing power cables, turn off the switches of the equipment and its upstream and downstream switches.
- Before performing operations on the equipment, check that all tools meet the requirements and record the tools. After the operations are complete, collect all of the tools to prevent them from being left inside the equipment.
- Before installing power cables, check that cable labels are correct and cable terminals are insulated.
- When installing the equipment, use a torque tool of a proper measurement range to tighten the screws. When using a wrench to tighten the screws, ensure that the wrench does not tilt and the torque error does not exceed 10% of the specified value.
- Ensure that bolts are tightened with a torque tool and marked in red and blue after double-check. Installation personnel mark tightened bolts in blue. Quality inspection personnel confirm that the bolts are tightened and then mark them in red. (The marks must cross the edges of the bolts.)

 Copyright © Huawei Digital Power Technologies Co., Ltd.

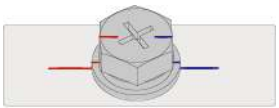

- If the equipment has multiple inputs, disconnect all the inputs and wait until the equipment is completely powered off before performing operations on the equipment.
- Before maintaining a downstream electrical or power distribution device, turn off the output switch on the power supply equipment.
- During equipment maintenance, attach "Do not switch on" labels near the upstream and downstream switches or circuit breakers as well as warning signs to prevent accidental connection. The equipment can be powered on only after troubleshooting is complete.
- Do not open equipment panels.
- Check equipment connections periodically, ensuring that all screws are securely tightened.
- Only qualified professionals can replace a damaged cable.
- Do not scrawl, damage, or block any labels or nameplates on the equipment. Promptly replace labels that have worn out.
- Do not use solvents such as water, alcohol, or oil to clean electrical components inside or outside of the equipment.

Grounding

- Ensure that the grounding impedance of the equipment complies with local electrical standards.
- Ensure that the equipment is connected permanently to the protective ground. Before operating the equipment, check its electrical connection to ensure that it is reliably grounded.
- Do not work on the equipment in the absence of a properly installed ground conductor.
- Do not damage the ground conductor.

Cabling Requirements

- When selecting, installing, and routing cables, follow local safety regulations and rules.
- When routing power cables, ensure that there is no coiling or twisting. Do not join or weld power cables. If necessary, use a longer cable.
- Ensure that all cables are properly connected and insulated, and meet specifications.
- Ensure that the slots and holes for routing cables are free from sharp edges, and that the positions where cables are routed through pipes or cable holes are equipped with cushion materials to prevent the cables from being damaged by sharp edges or burrs.
- Ensure that cables of the same type are bound together neatly and straight and that the cable sheath is intact. When routing cables of different types, ensure that they are away from each other without entanglement and overlapping.

 Copyright © Huawei Digital Power Technologies Co., Ltd.

- Secure buried cables using cable supports and cable clips. Ensure that the cables in the backfill area are in close contact with the ground to prevent cable deformation or damage during backfilling.
- If the external conditions (such as the cable layout or ambient temperature) change, verify the cable usage in accordance with the IEC-60364-5-52 or local laws and regulations. For example, check that the current-carrying capacity meets requirements.
- When routing cables, reserve at least 30 mm clearance between the cables and heat-generating components or areas. This prevents deterioration or damage to the cable insulation layer.

1.3 Environment Requirements

DANGER

Do not expose the equipment to flammable or explosive gas or smoke. Do not perform any operation on the equipment in such environments.

DANGER

Do not store any flammable or explosive materials in the equipment area.

DANGER

Do not place the equipment near heat sources or fire sources, such as smoke, candles, heaters, or other heating devices. Overheat may damage the equipment or cause a fire.

WARNING

Install the equipment in an area far away from liquids. Do not install it under areas prone to condensation, such as under water pipes and air exhaust vents, or areas prone to water leakage, such as air conditioner vents, ventilation vents, or feeder windows of the equipment room. Ensure that no liquid enters the equipment to prevent faults or short circuits.

WARNING

To prevent damage or fire due to high temperature, ensure that the ventilation vents or heat dissipation systems are not obstructed or covered by other objects while the equipment is running.

 Copyright © Huawei Digital Power Technologies Co., Ltd.

General Requirements

- Store the equipment according to the storage requirements. Equipment damage caused by unqualified storage conditions is not covered under the warranty.
- Keep the installation and operating environments of the equipment within the allowed ranges. Otherwise, its performance and safety will be compromised.
- The operating temperature range provided in the equipment's technical specifications refers to the ambient temperatures in equipment's installation environment.
- Do not install, use, or operate outdoor equipment and cables (including but not limited to moving equipment, operating equipment and cables, inserting connectors to or removing connectors from signal ports connected to outdoor facilities, working at heights, performing outdoor installation, and opening doors) in harsh weather conditions such as lightning, rain, snow, and level 6 or stronger wind.
- Do not install the equipment in an environment with dust, smoke, volatile or corrosive gases, infrared and other radiations, organic solvents, or salty air.
- Do not install the equipment in an environment with conductive metal or magnetic dust.
- Do not install the equipment in an area conducive to the growth of microorganisms such as fungus or mildew.
- Do not install the equipment in an area with strong vibration, noise, or electromagnetic interference.
- Ensure that the site complies with local laws, regulations, and related standards.
- Ensure that the ground in the installation environment is solid, free from spongy or soft soil, and not prone to subsidence. The site must not be located in a low-lying land prone to water or snow accumulation, and the horizontal level of the site must be above the highest water level of that area in history.
- Do not install the equipment in a position that may be submerged in water.
- If the equipment is installed in a place with abundant vegetation, in addition to routine weeding, harden the ground underneath the equipment using cement or gravel (the area shall be greater than or equal to 3 m x 2.5 m).
- Do not install the equipment outdoors in salt-affected areas because it may be corroded. A salt-affected area refers to the region within 500 m of the coast or prone to sea breeze. Regions prone to sea breeze vary with weather conditions (such as typhoons and monsoons) or terrains (such as dams and hills).
- Before installation, operation, and maintenance, clean up any water, ice, snow, or other foreign objects on the top of the equipment.
- When installing the equipment, ensure that the installation surface is solid enough to bear the weight of the equipment.
- After installing the equipment, remove the packing materials such as cartons, foam, plastics, and cable ties from the equipment area.

 Copyright © Huawei Digital Power Technologies Co., Ltd.

1.4 Mechanical Safety

WARNING

Ensure that all necessary tools are ready and inspected by a professional organization. Do not use tools that have signs of scratches or fail to pass the inspection or whose inspection validity period has expired. Ensure that the tools are secure and not overloaded.

WARNING

Do not drill holes into the equipment. Doing so may affect the sealing performance and electromagnetic containment of the equipment and damage components or cables inside. Metal shavings from drilling may short-circuit boards inside the equipment.

General Requirements

- Repaint any paint scratches caused during equipment transportation or installation in a timely manner. Equipment with scratches must not be exposed for an extended period of time.
- Do not perform operations such as arc welding and cutting on the equipment without evaluation by the Company.
- Do not install other devices on the top of the equipment without evaluation by the Company.
- When performing operations over the top of the equipment, take measures to protect the equipment against damage.
- Use correct tools and operate them in the correct way.

Moving Heavy Objects

- Be cautious to prevent injury when moving heavy objects.

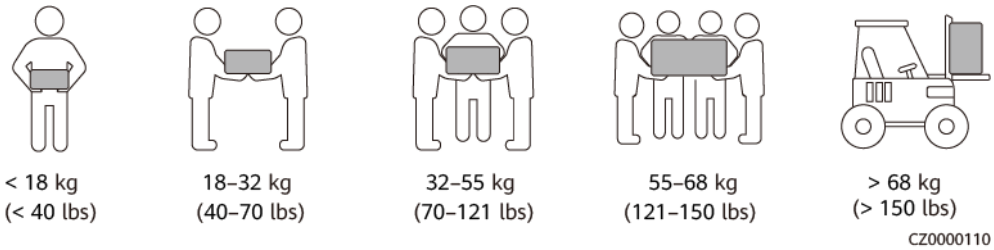

- If multiple persons need to move a heavy object together, determine the manpower and work division with consideration of height and other conditions to ensure that the weight is equally distributed.
- If two persons or more move a heavy object together, ensure that the object is lifted and landed simultaneously and moved at a uniform pace under the supervision of one person.

 Copyright © Huawei Digital Power Technologies Co., Ltd.

- Wear personal protective gears such as protective gloves and shoes when manually moving the equipment.
- To move an object by hand, approach to the object, squat down, and then lift the object gently and stably by the force of the legs instead of your back. Do not lift it suddenly or turn your body around.
- Do not quickly lift a heavy object above your waist. Place the object on a workbench that is half-waist high or any other appropriate place, adjust the positions of your palms, and then lift it.
- Move a heavy object stably with balanced force at an even and low speed. Put down the object stably and slowly to prevent any collision or drop from scratching the surface of the equipment or damaging the components and cables.
- When moving a heavy object, be aware of the workbench, slope, staircase, and slippery places. When moving a heavy object through a door, ensure that the door is wide enough to move the object and avoid bumping or injury.
- When transferring a heavy object, move your feet instead of turning your waist around. When lifting and transferring a heavy object, ensure that your feet point to the target direction of movement.
- When transporting the equipment using a pallet truck or forklift, ensure that the tynes are properly positioned so that the equipment does not topple. Before moving the equipment, secure it to the pallet truck or forklift using ropes. When moving the equipment, assign dedicated personnel to take care of it.
- Choose sea, roads in good conditions, or airplanes for transportation. Do not transport the equipment by railway. Avoid tilt or jolt during transportation.

Using Ladders

- Use wooden or insulated ladders when you need to perform live-line working at heights.
- Platform ladders with protective rails are preferred. Single ladders are not recommended.
- Before using a ladder, check that it is intact and confirm its load bearing capacity. Do not overload it.
- Ensure that the ladder is securely positioned and held firm.

CZ00000107

- When climbing up the ladder, keep your body stable and your center of gravity between the side rails, and do not overreach to the sides.

- When a step ladder is used, ensure that the pull ropes are secured.
- If a single ladder is used, the recommended angle for the ladder against the floor is 75 degrees, as shown in the following figure. A square can be used to measure the angle.

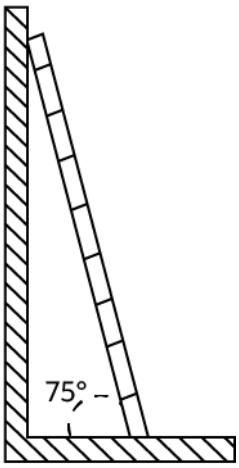

PI02SC0008

- If a single ladder is used, ensure that the wider end of the ladder is at the bottom, and take protective measures to prevent the ladder from sliding.
- If a single ladder is used, do not climb higher than the fourth rung of the ladder from the top.
- If you use a single ladder to climb up to a platform, ensure that the ladder is at least 1 m higher than the platform.

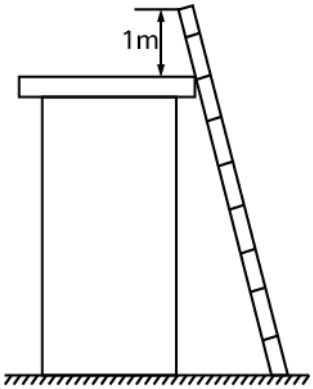

PI02SC0009

Hoisting

- Only trained and qualified personnel are allowed to perform hoisting operations.
- Install temporary warning signs or fences to isolate the hoisting area.
- Ensure that the foundation where hoisting is performed on meets the load-bearing requirements.
- Before hoisting objects, ensure that hoisting tools are firmly secured onto a fixed object or wall that meets the load-bearing requirements.
- During hoisting, do not stand or walk under the crane or the hoisted objects.
- Do not drag steel ropes and hoisting tools or bump the hoisted objects against hard objects during hoisting.

- Ensure that the angle between two hoisting ropes is no more than 90 degrees, as shown in the following figure.

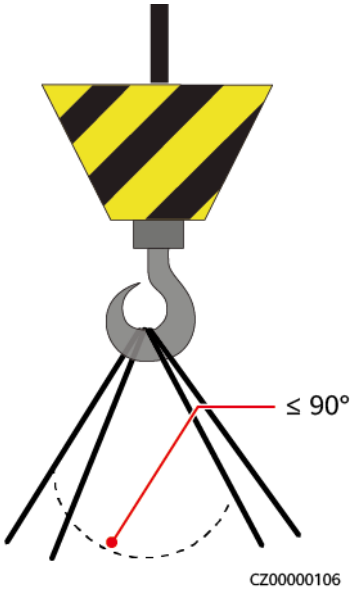

Drilling Holes

- Obtain consent from the customer and contractor before drilling holes.
- Wear protective equipment such as safety goggles and protective gloves when drilling holes.
- To avoid short circuits or other risks, do not drill holes into buried pipes or cables.
- When drilling holes, protect the equipment from shavings. After drilling, clean up any shavings.

2 Overview

2.1 Product Introduction

Functions

The SUN2000 inverter is a three-phase grid-tied PV string inverter that converts the DC power generated by PV strings into AC power and feeds the power into the power grid.

Model

This document covers the following SUN2000 models:

- SUN2000-3KTL-M1
- SUN2000-4KTL-M1
- SUN2000-5KTL-M1
- SUN2000-6KTL-M1
- SUN2000-8KTL-M1
- SUN2000-10KTL-M1
- SUN2000-10KTL-BEM1

NOTE

The SUN2000-8KTL-M1, SUN2000-10KTL-BEM1 and SUN2000-10KTL-M1 are not applicable to Australia.

Figure 2-1 Model description (using SUN2000-5KTL-M1 as an example)

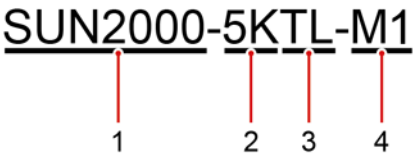

Table 2-1 Model description

Identifier	Description	Value
1	Product family name	SUN2000: three-phase grid-tied PV string inverter
2	Power class	• 3K: rated power of 3 kW • 4K: rated power of 4 kW • 5K: rated power of 5 kW • 6K: rated power of 6 kW • 8K: rated power of 8 kW • 10K: rated power of 10 kW
3	Topology	TL: transformerless
4	Product code	M1: product series with an input voltage level of 1100 V DC

Networking Application

The SUN2000 applies to residential rooftop grid-tied systems and small-sized ground PV plant grid-tied systems. Typically, a grid-tied system consists of PV strings, grid-tied inverters, AC switches, and power distribution units.

Figure 2-2 Networking application (dashed boxes indicate optional components)

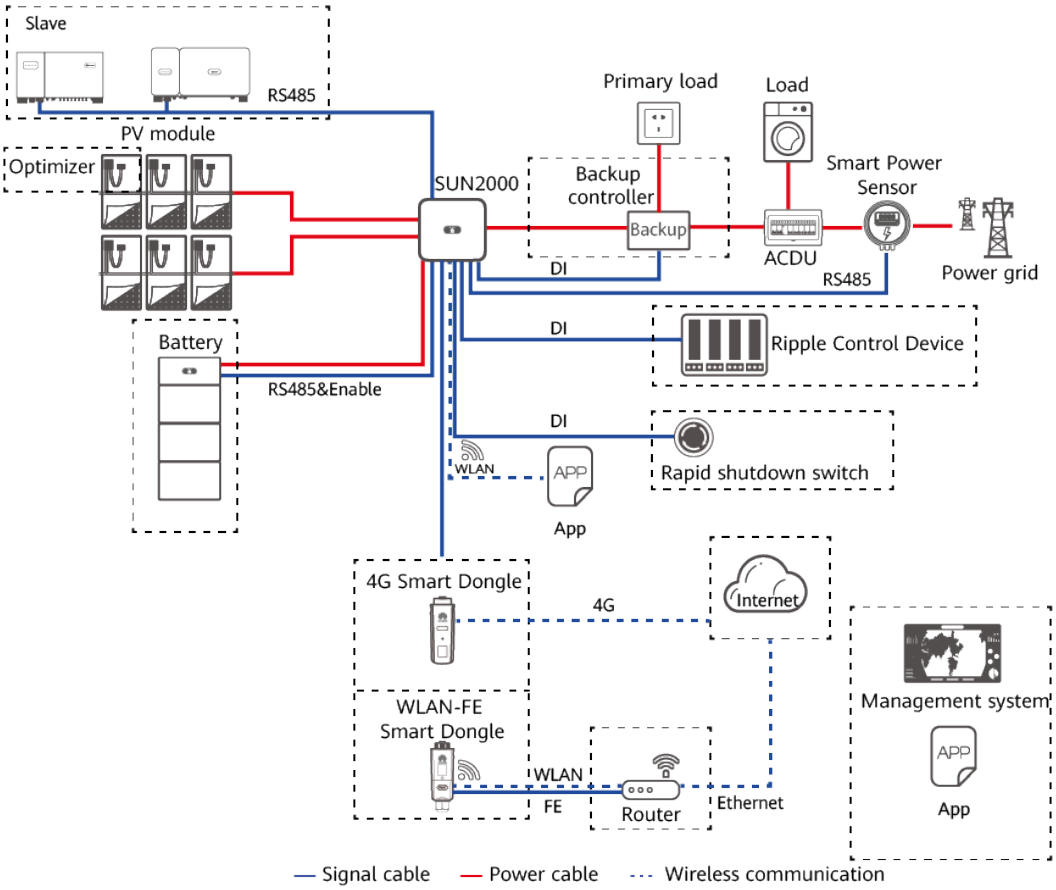

NOTE

- If the built-in Wi-Fi module of the SUN2000 connects to the app, only device commissioning can be performed.
- If inverters are cascaded without any battery, the main inverter model can be SUN2000-(3KTL-10KTL)-M1 Series. The slave inverter model can be SUN2000-(3KTL-10KTL)-M1 Series, SUN2000-(8KTL-20KTL)-M2, SUN2000-(20KTL-40KTL)-M3, SUN2000-(5KTL-20KTL)-M0, SUN2000-50KTL/60KTL/65KTL-M0, SUN2000-29.9KTL/36KTL, or SUN2000-33KTL-A.
- If inverters are cascaded with an ESS, M1/M2/M5/MB0 can be cascaded. Each M1 can connect to a maximum of two ESSs, and each MB0 can connect to a maximum of four ESSs. In the Smart Dongle networking scenario, a maximum of three inverters and six ESSs can be connected.
- For details about SmartAssistant networking, see **Residential Solution Mapping Relationship and Wiring Guide**.
- For details about Smart Guard networking, see **Residential Solution Mapping Relationship and Wiring Guide**.

CAUTION

The off-grid load output port of the Backup Box cannot be directly connected to the power grid. Otherwise, the Backup Box will be shut down due to overload.

NOTE

For a PV string connected to an MPPT circuit, the model, orientation, and tilt angle of PV modules in the PV string must be the same.

Compatibility with Third-Party Systems

Huawei inverters are compatible with third-party inverters or third-party energy storage systems (ESSs).

Figure 2-3 Networking with third-party systems

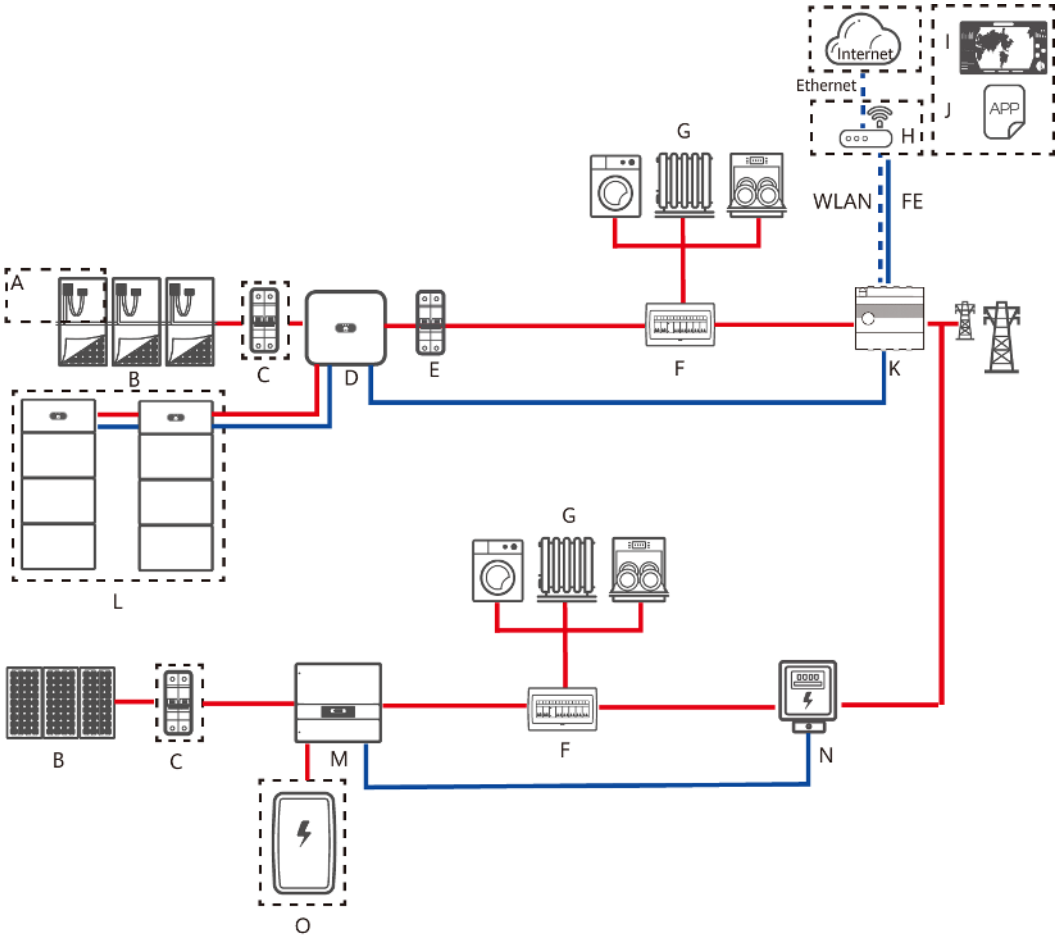

(A) Optimizer	(B) PV string	(C) DC switch
(D) Huawei smart PV inverter	(E) AC switch	(F) AC power distribution unit (PDU)
(G) Load	(H) Router	(I) Management System
(J) App	(K) SmartAssistant	(L) LUNA2000
(M/O) Third-party inverter or third-party ESS	(N) Power meter	

Supported Power Grid Types

The SUN2000 supports TN-S, TN-C, TN-C-S, TT, and IT power grids.

Figure 2-4 Power grid types

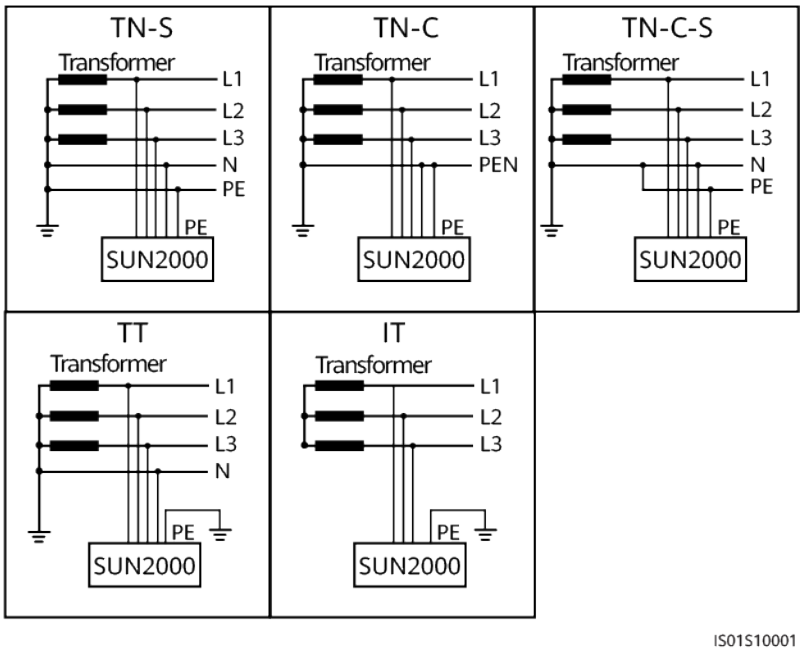

NOTE

- When the SUN2000 is used in the TT power grid, the N-to-PE voltage must be less than 30 V.
- When the SUN2000 is used in the IT power grid, set **Isolation** to **Input ungrounded, with TF**.

2.2 Appearance

Figure 2-5 Appearance

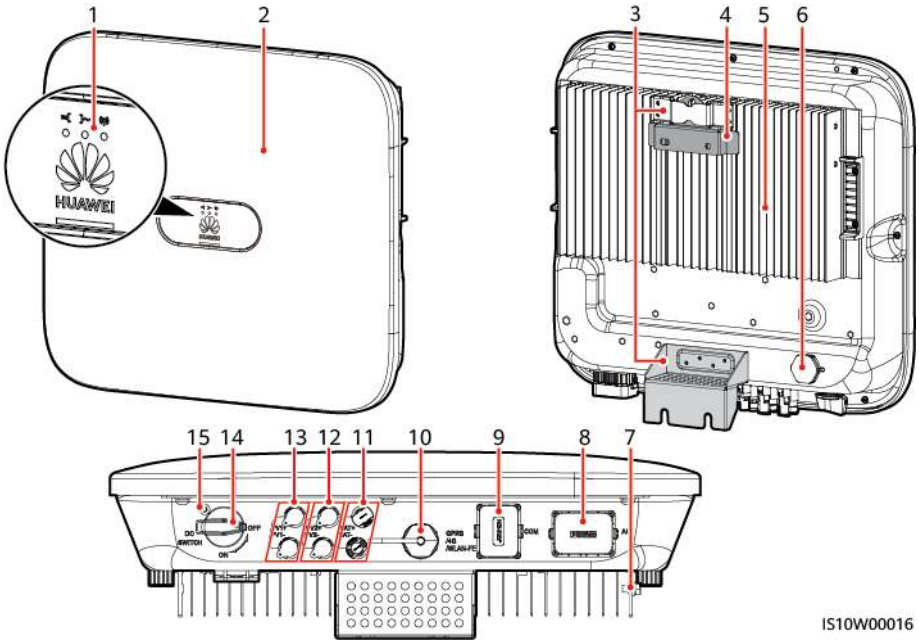

(1) LED indicator
(2) Front panel
(3) Hanging kit
(4) Mounting bracket
(5) Heat sink
(6) Ventilation valve
(7) Ground screw
(8) AC output port (AC)
(9) Communications port (COM)
(10) Smart Dongle port (GPRS/4G/WLAN-FE)
(11) Battery terminals (BAT+/BAT–)
(12) DC input terminals (PV2+/PV2–)
(13) DC input terminals (PV1+/PV1–)
(14) DC switch (DC SWITCH)
(15) Hole for the DC switch locking screw

NOTE

Two M6 screw holes are reserved on the left and right sides of the SUN2000 for installing the awning.

Table 2-2 Indicator description

Category	Status		Description
Running indicator 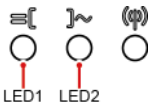	**LED1**	**LED2**	-
	Steady green	Steady green	The SUN2000 is operating in grid-tied mode.
	Blinking green at long intervals (on for 1s and then off for 1s)	Off	The DC is on and the AC is off.
	Blinking green at long intervals (on for 1s and then off for 1s)	Blinking green at long intervals (on for 1s and then off for 1s)	Both the DC and AC are on, and the SUN2000 is not supplying power to the power grid.
	Off	Blinking green at long intervals (on for 1s and then off for 1s)	The DC is off and the AC is on.
	Steady orange	Steady orange	The SUN2000 is operating in the off-grid mode.

Category	Status			Description
	Blinking orange slowly	Off		The DC is on, and the SUN2000 has no output in the off-grid mode.
	Blinking orange slowly	Blinking orange slowly		The SUN2000 is operating in the overload in backup mode.
	Off	Off		Both the DC and AC are off.
	Blinking red at short intervals (on for 0.2s and then off for 0.2s)	-		DC environment alarm. For example, the input voltage of the PV string is high, the PV string is reversely connected, or the insulation resistance is low.
	-	Blinking red at short intervals		AC environment alarm. For example, the power grid is undervoltage, overvoltage, overfrequency, or underfrequency.
	Steady red	Steady red		Fault
Communications indicator 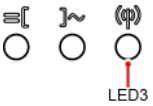	**LED3**			-
	Blinking green at short intervals (on for 0.2s and then off for 0.2s)			Communication is in progress. (When a mobile phone is connected to the SUN2000, the indicator blinks green at long intervals, indicating that the phone is connected to the SUN2000.)
	Blinking green at long intervals (on for 1s and then off for 1s)			Mobile phone access
	Off			No communication
Device replacement indicator	**LED1**	**LED2**	**LED3**	–
	Steady red	Steady red	Steady red	The SUN2000 hardware is faulty and the SUN2000 needs to be replaced.

2.3 Label Description

2.3.1 Enclosure Labels

Symbol	Name	Description
	Delay discharge	Residual voltage exists after the SUN2000 is powered off. It takes 5 minutes for the SUN2000 to discharge to the safe voltage.
	Burn warning	Do not touch a running SUN2000 because it generates high temperatures on the shell.
	Electric shock warning	• High voltage exists after the SUN2000 is powered on. Only qualified and trained electrical technicians are allowed to perform operations on the SUN2000. • High touch current exists after the SUN2000 is powered on. Before powering on the SUN2000, ensure that the SUN2000 is properly grounded.
	Refer to documentation	Reminds operators to refer to the documents delivered with the SUN2000.
	Grounding label	Indicates the position for connecting the PE cable.

 Copyright © Huawei Digital Power Technologies Co., Ltd.

Symbol	Name	Description
	Operation warning	Do not remove the DC input connector or AC output connector when the SUN2000 is running.
	SUN2000 serial number	Indicates the serial number.
	SUN2000 MAC address	Indicates the MAC address.
	SUN2000 Wi-Fi login QR code	Scan the QR code to connect to the Huawei SUN2000 Wi-Fi network.

2.3.2 Product Nameplate

The nameplate contains the trademark, product model, important technical specifications, compliance symbols, company name, and place of origin.

2.4 Working Principles

2.4.1 Circuit Diagram

Two PV strings connect to the SUN2000, and their maximum power points are tracked by two maximum power point tracking (MPPT) circuits. The SUN2000 converts DC power into three-phase AC power through an inverter circuit. Surge protection is supported on both the DC and AC sides.

Figure 2-6 SUN2000 conceptual diagram

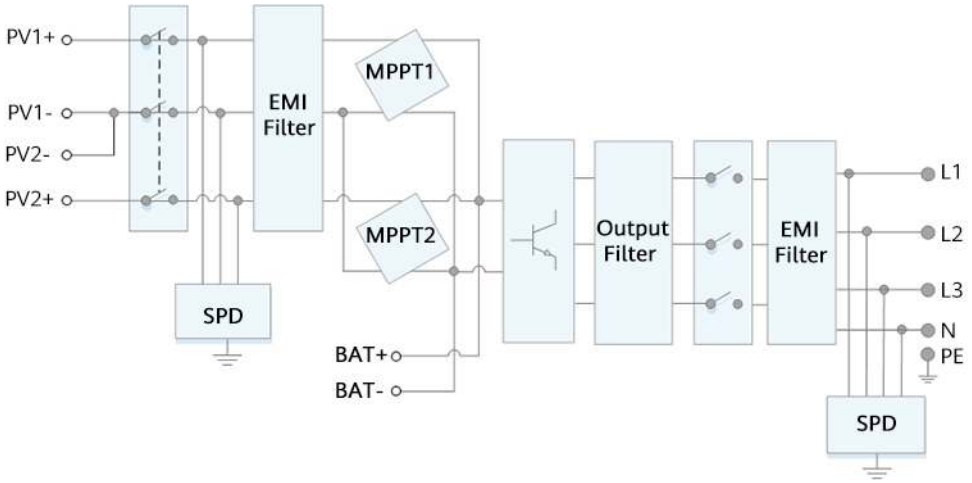

2.4.2 Working Modes

The inverter can work in Standby, Operating, or Shutdown mode.

Figure 2-7 Working modes

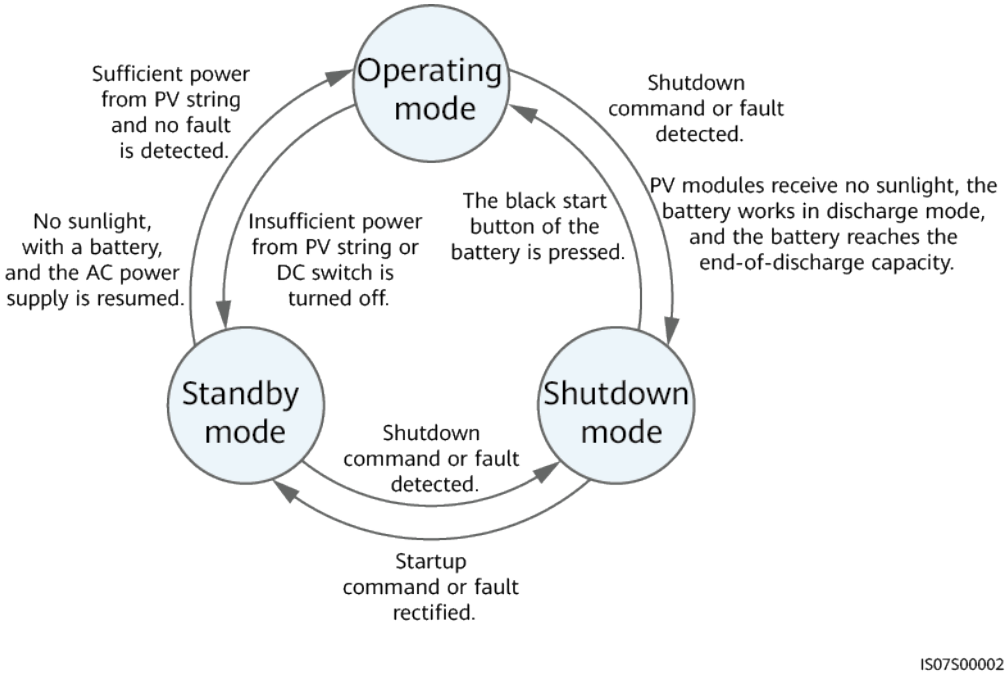

Table 2-3 Working mode description

Working Mode	Description
Standby	The inverter enters Standby mode when the external environment does not meet the operating requirements. In Standby mode: ● The inverter continuously performs status check and enters the Operating mode once the operating requirements are met. ● The inverter enters Shutdown mode after detecting a shutdown command or a fault after startup.
Operating	In Operating mode: ● The inverter converts DC power from PV strings into AC power and feeds the power to the power grid. ● The inverter tracks the maximum power point to maximize the PV string output. ● If the inverter detects a fault or a shutdown command, it enters the Shutdown mode. ● The inverter enters Standby mode after detecting that the PV string output power is not suitable for connecting to the power grid for generating power. ● If the PV modules receive no sunlight, the battery works in discharge mode, and the battery reaches the end-of-discharge capacity, the inverter enters Standby mode.
Shutdown	● In Standby or Operating mode, the inverter enters Shutdown mode after detecting a fault or shutdown command. ● In Shutdown mode, the inverter enters Standby mode after detecting a startup command or that the fault is rectified. ● In Shutdown mode, if the black start button of the battery is pressed, the inverter enters Operating mode.

 Copyright © Huawei Digital Power Technologies Co., Ltd.

3 Storage

The following requirements should be met if the SUN2000 is not put into use directly:

- Do not unpack the SUN2000.
- Keep the storage temperature at –40°C to +70°C and the humidity at 5%–95% RH.
- The SUN2000 should be stored in a clean and dry place and be protected from dust and water vapor corrosion.
- A maximum of eight SUN2000s can be stacked. To avoid personal injury or device damage, stack SUN2000s with caution to prevent them from falling over.
- Periodic inspections are required during the storage. Replace the packing materials if necessary.
- If the SUN2000 has been long-term stored, inspections and tests should be conducted by qualified personnel before it is put into use.

 Copyright © Huawei Digital Power Technologies Co., Ltd.

4 Installation

4.1 Checking Before Installation

Outer Packing Materials

Before unpacking the inverter, check the outer packing materials for damage, such as holes and cracks, and check the inverter model. If any damage is found or the inverter model is not what you requested, do not unpack the package and contact your supplier as soon as possible.

NOTE

You are advised to remove the packing materials within 24 hours before installing the inverter.

Package Contents

NOTICE

- After placing the equipment in the installation position, unpack it with care to prevent scratches. Keep the equipment stable during unpacking.

After unpacking the inverter, check that the contents are intact and complete. If any damage is found or any component is missing, contact your supplier.

NOTE

For details about the number of contents, see the *Packing List* in the packing case.

 Copyright © Huawei Digital Power Technologies Co., Ltd.

4.2 Tools

Type	Tool			
Installation Tools	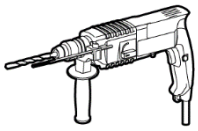 Hammer drill Drill bit: Φ8 mm and Φ6 mm	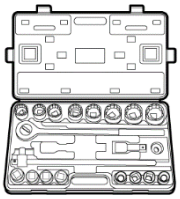 Socket wrench set	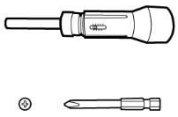 Torque screwdriver Phillips head: M3	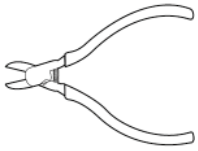 Diagonal pliers
	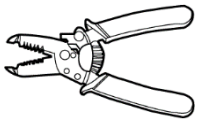 Wire stripper	 Removal wrench Model: PV-MS-HZ Open-end Wrench; manufacturer: Staubli	 Rubber mallet	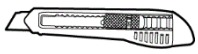 Utility knife
	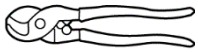 Cable cutter	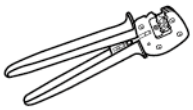 Crimping tool Model: PV-CZM-22100/19100; manufacturer: Staubli	 Multimeter DC voltage measurement range ≥ 1100 V DC	 Vacuum cleaner
	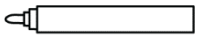 Marker	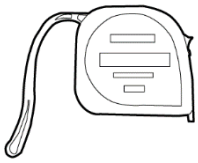 Measuring tape	 Bubble or digital level	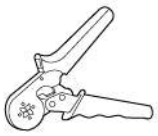 Cord end terminal crimper

 Copyright © Huawei Digital Power Technologies Co., Ltd.

Type	Tool			
	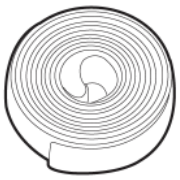 Heat shrink tubing	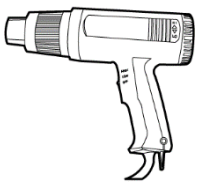 Heat gun	Cable tie	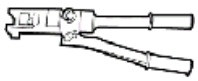 Hydraulic pliers
PPE	Insulated gloves	Protective gloves	Dust mask	Safety shoes
	Safety goggles	-	-	-

4.3 Determining the Installation Position

4.3.1 Environment Requirements

Basic Requirements

- The SUN2000 is protected to IP65 and can be installed indoors or outdoors.
- Do not install the SUN2000 in a place where personnel are easy to come into contact with its enclosure and heat sinks, because these parts are extremely hot during operation.
- Do not install the SUN2000 in areas with flammable or explosive materials.
- Do not install the SUN2000 at a place within children's reach.
- Do not install the SUN2000 outdoors in salt areas because it will be corroded there and may cause fire. A salt area refers to the region within 500 meters from the coast or prone to sea breeze. The regions prone to sea breeze vary depending on weather conditions (such as typhoons and monsoons) or terrains (such as dams and hills).
- The SUN2000 must be installed in a well-ventilated environment to ensure good heat dissipation.
- Recommended: Install the SUN2000 in a sheltered place or a place with an awning.

Mounting Structure Requirements

- The mounting structure where the SUN2000 is installed must be fireproof.
- Do not install the SUN2000 on flammable building materials.
- The SUN2000 is heavy. Ensure that the installation surface is solid enough to bear the weight load.
- In residential areas, do not install the SUN2000 on drywalls or walls made of similar materials which have a weak sound insulation performance because the noise generated by the SUN2000 is noticeable.

4.3.2 Space Requirements

Installation Angle Requirements

The SUN2000 can be wall-mounted or pole-mounted. The installation angle requirements are as follows:

- Install the SUN2000 vertically or at a maximum back tilt of 15 degrees to facilitate heat dissipation.
- Do not install the SUN2000 at forward tilted, excessive back tilted, side tilted, horizontal, or upside down positions.

Figure 4-1 Installation tilts

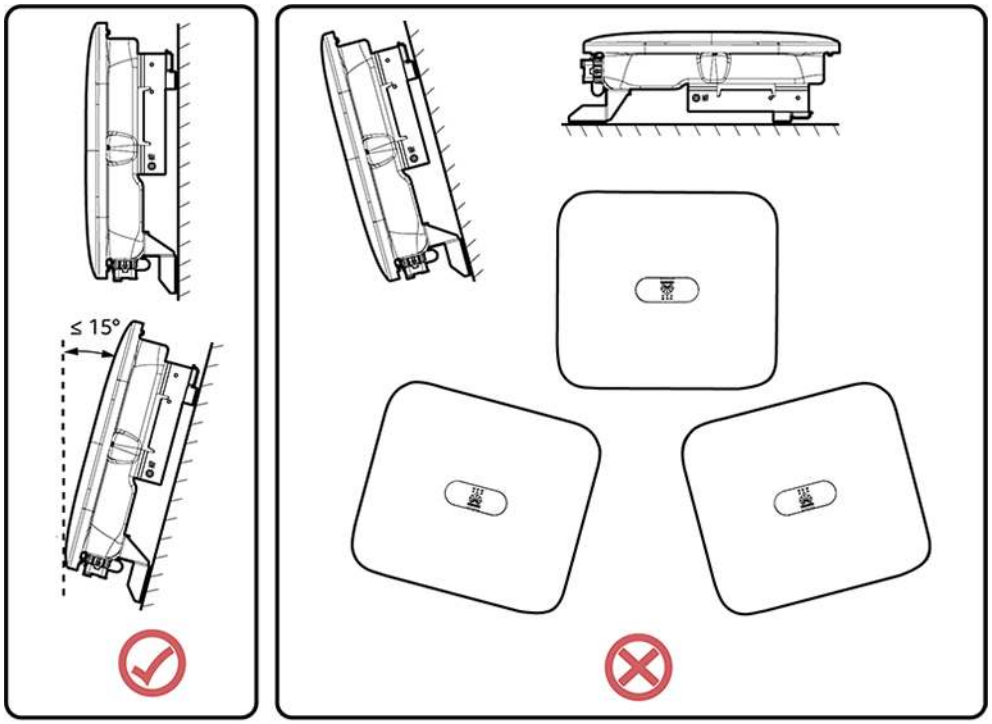

Installation Space Requirements

- Reserve enough space around the SUN2000 to ensure sufficient space for installation and heat dissipation.

Figure 4-2 Installation space

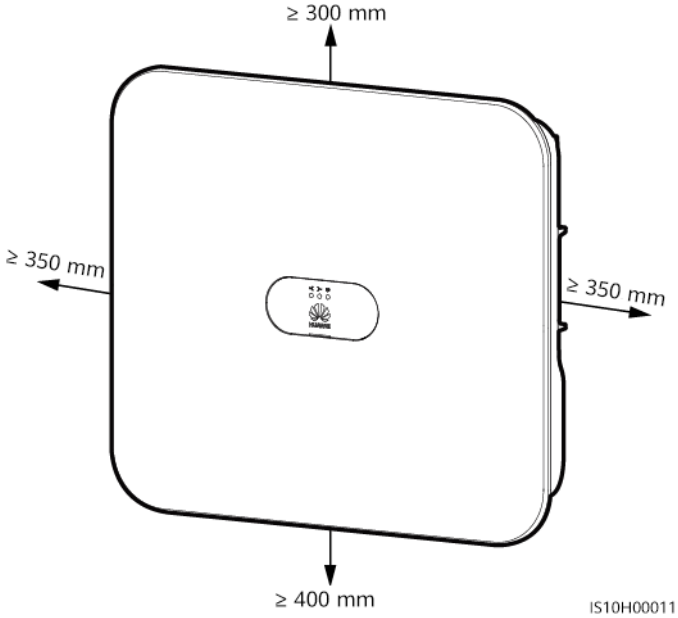

- When installing multiple SUN2000s, install them in horizontal mode if sufficient space is available and install them in triangle mode if no sufficient space is available. Stacked installation is not recommended.

Figure 4-3 Horizontal installation (recommended)

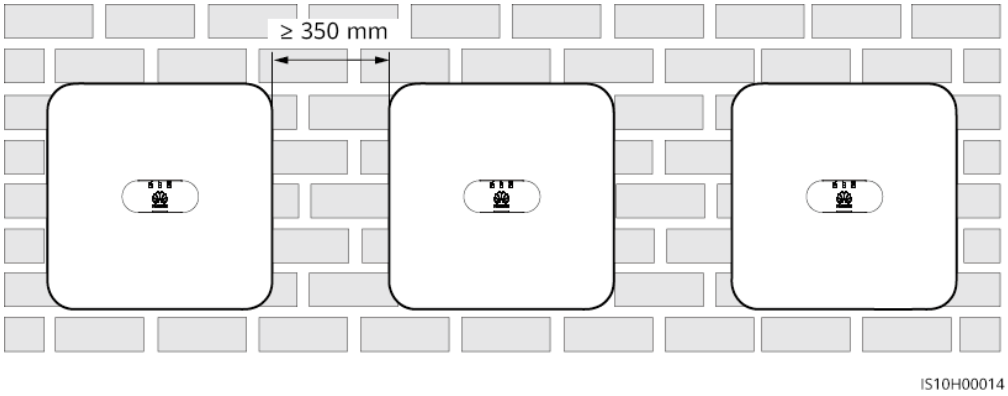

Figure 4-4 Staggered installation (recommended)

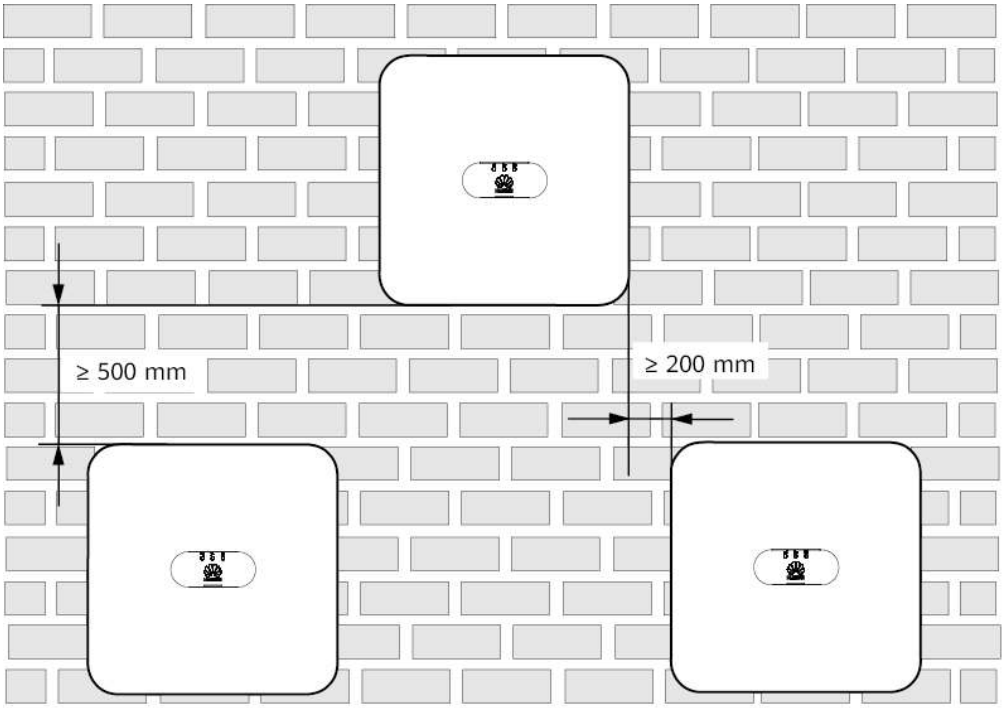

IS05W00017

Figure 4-5 Stacked installation (not recommended)

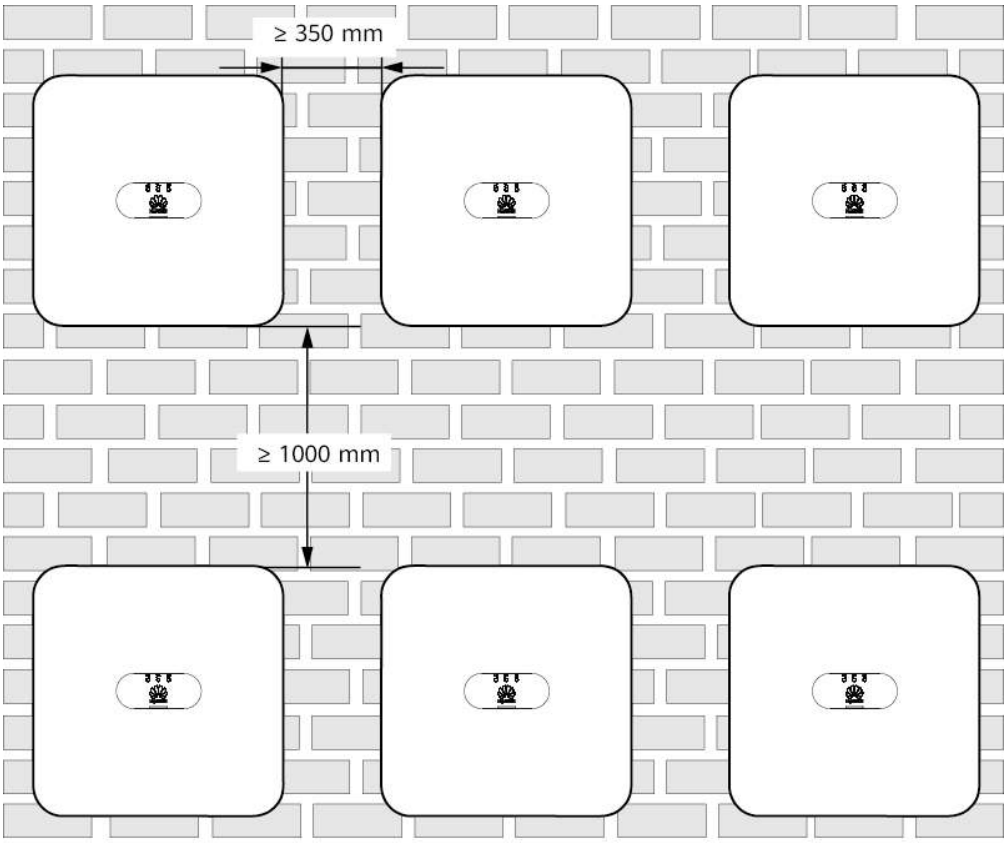

IS05W00016

4.4 Moving the SUN2000

Procedure

Step 1 Two persons are required to move the SUN2000 with one person on both sides. Lift the SUN2000 from the packing case and move it to the specified installation position.

CAUTION

- Move the SUN2000 with care to prevent device damage and personal injury.
- Do not use the wiring terminals and ports at the bottom to support any weight of the SUN2000.
- Place a foam pad or cardboard under the SUN2000 to protect the SUN2000 enclosure from damage.

Figure 4-6 Moving the SUN2000

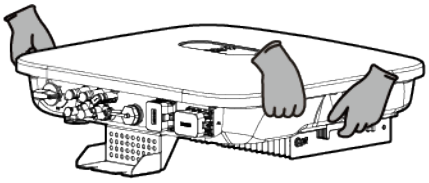

----End

4.5 Installing the Mounting Bracket

Installation Precautions

Figure 4-7 shows the dimensions of installation holes on the SUN2000.

Figure 4-7 Mounting bracket dimensions

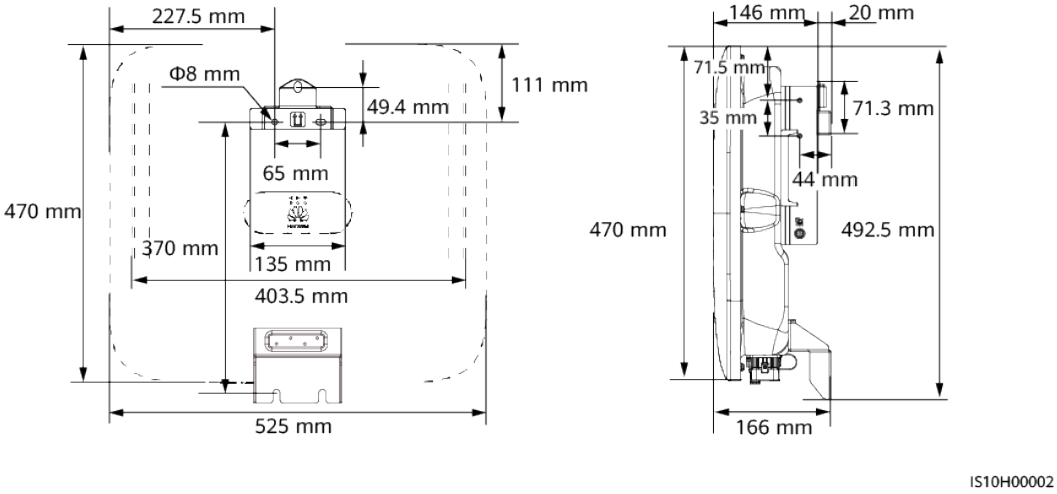

NOTE

Two M6 screw holes are reserved on both left and right sides of the enclosure for installing an awning.

4.5.1 Wall-mounted Installation

Procedure

Step 1 Determine the positions for drilling holes and mark the positions using a marker.

Step 2 Secure the mounting bracket.

NOTE

- M6x60 expansion bolts are delivered with the SUN2000. If the length and number of the bolts do not meet installation requirements, prepare M6 stainless steel expansion bolts by yourself.
- The expansion bolts delivered with the inverter are used for solid concrete walls. For other types of walls, prepare bolts by yourself and ensure that the wall meets the load bearing requirements of the inverter.

Figure 4-8 Expansion bolt composition

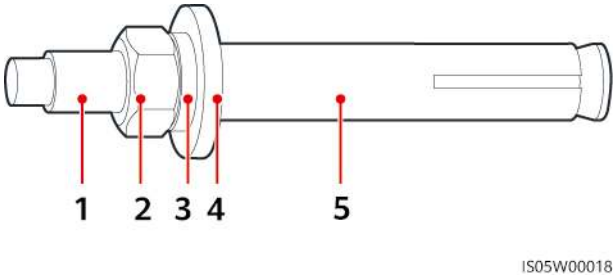

(1) Bolt (2) Nut (3) Spring washer

(4) Flat washer (5) Expansion sleeve

DANGER

Avoid drilling holes in the water pipes and cables buried in the wall.

NOTICE

- To prevent dust inhalation or contact with eyes, wear safety goggles and a dust mask when drilling holes.
- Clean up any dust in and around the holes using a vacuum cleaner and measure the distance between holes. If the holes are inaccurately positioned, drill holes again.
- Level the top of the expansion sleeve with the concrete wall after removing the bolt, spring washer, and flat washer. Otherwise, the mounting bracket will not be securely installed on the concrete wall.
- Loosen the nuts, flat washers, and spring washers of the two expansion bolts below.

Figure 4-9 Installing the mounting bracket

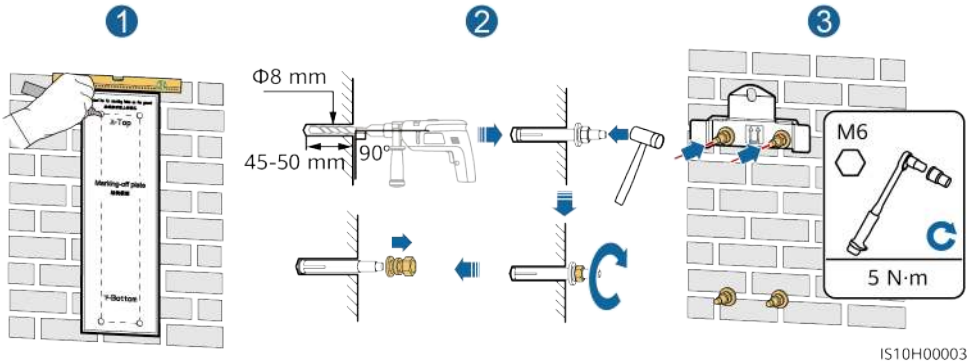

Step 3 (Optional) Install the locking screw for the DC switch.

NOTE

- The locking screw for the DC switch is delivered with the SUN2000. According to the Australian standard, the locking screw is used to secure the DC switch to prevent the SUN2000 from being started by mistake.
- For the model used in Australia, perform this step based on the local standards.

Figure 4-10 Installing the locking screw for the DC switch

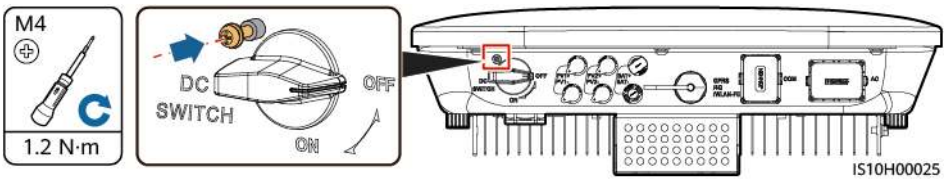

Step 4 Install the SUN2000 onto the mounting bracket.

Step 5 Tighten the nut.

Figure 4-11 Installing a SUN2000

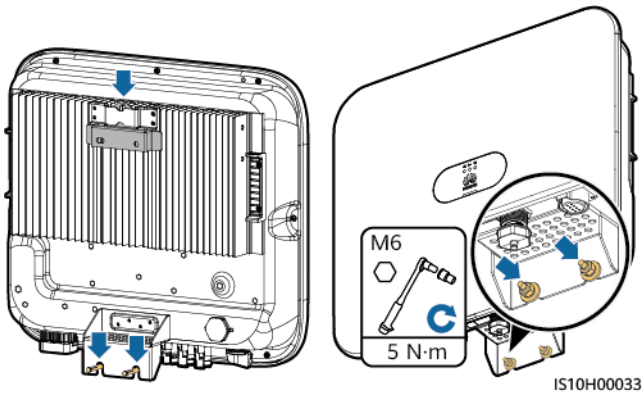

Step 6 (Optional) Install an anti-theft lock.

NOTICE

- Prepare an anti-theft lock suitable for the lock hole diameter (Φ8 mm) by yourself. Ensure that the lock can be installed successfully.
- Outdoor waterproof lock is recommended.
- Keep the key to the anti-theft lock properly.

Figure 4-12 Installing an anti-theft lock

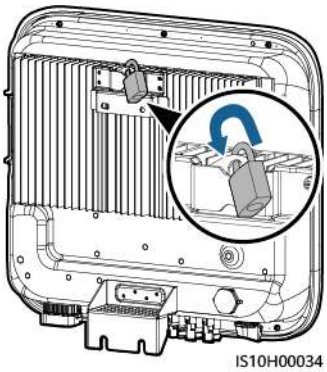

----End

4.5.2 Support Mounting

Prerequisites

Prepare M6 stainless steel bolt assemblies (including flat washers, spring washers, and M6 bolts) with appropriate lengths as well as matched flat washers and nuts based on the support specifications.

Procedure

Step 1 Determine the positions for drilling holes using the marking-off plate, and then mark the positions with a marker.

Figure 4-13 Determining hole positions

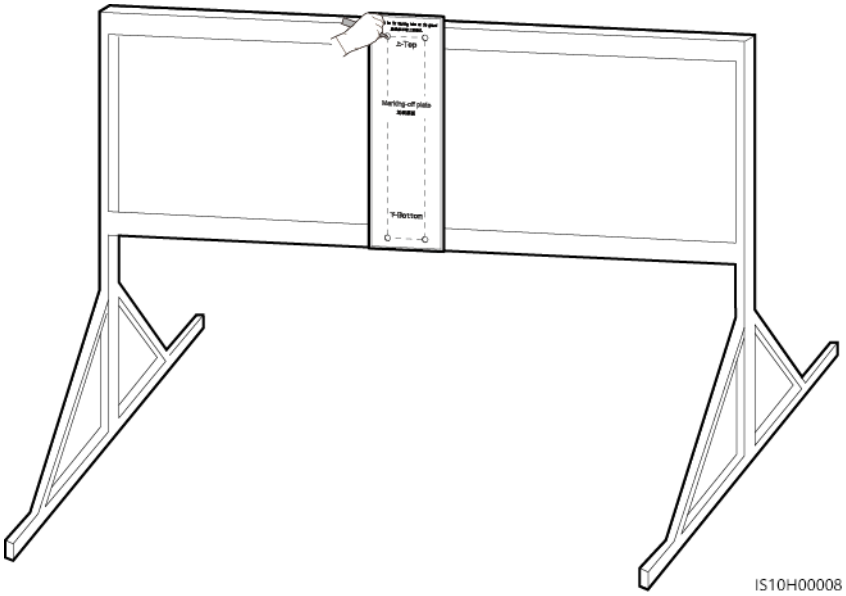

Step 2 Drill holes using a hammer drill.

NOTE

You are advised to apply anti-rust paint on the hole positions for protection.

Figure 4-14 Drilling holes

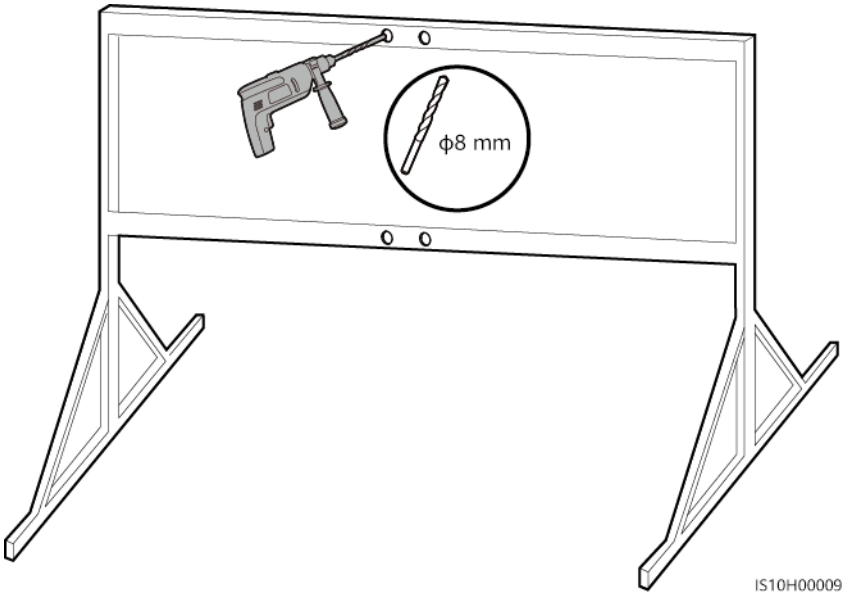

Step 3 Secure the mounting bracket.

Figure 4-15 Securing the mounting bracket

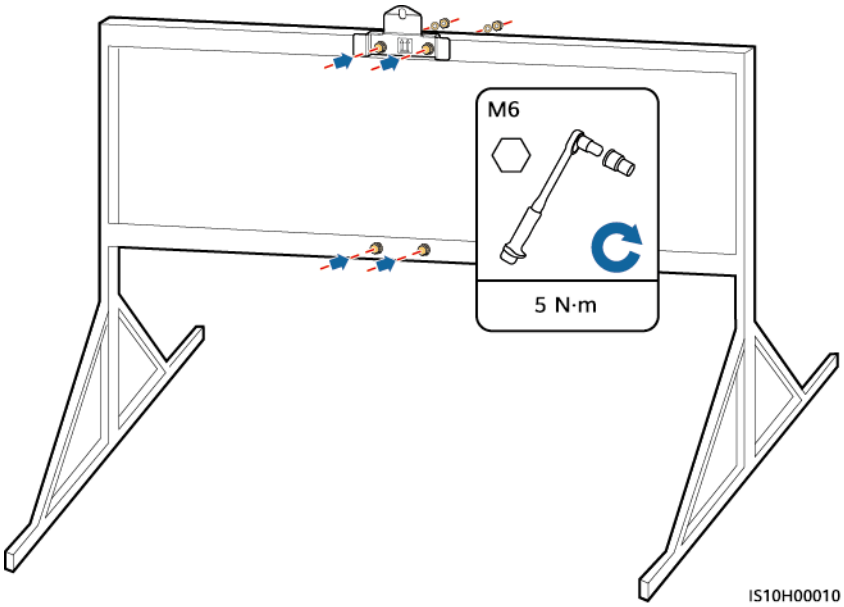

Step 4 (Optional) Install the locking screw for the DC switch.

NOTE

- The locking screw for the DC switch is delivered with the SUN2000. According to the Australian standard, the locking screw is used to secure the DC switch to prevent the SUN2000 from being started by mistake.
- For the model used in Australia, perform this step based on the local standards.

Figure 4-16 Installing the locking screw for the DC switch

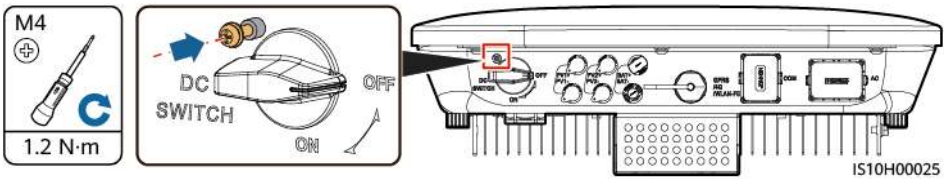

Step 5 Install the inverter on the mounting bracket.

Step 6 Tighten the bolt assemblies.

Figure 4-17 Installing a SUN2000

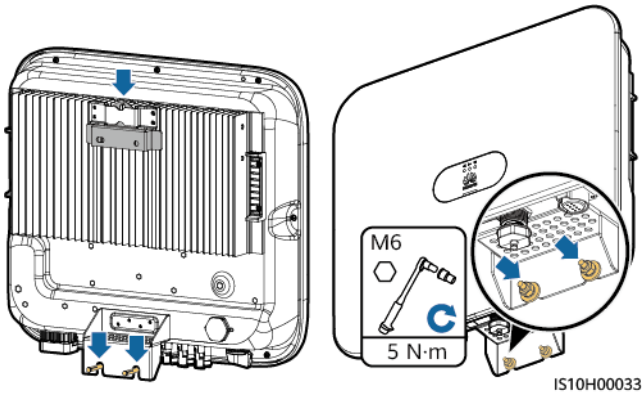

Step 7 (Optional) Install an anti-theft lock.

NOTICE

- Prepare an anti-theft lock suitable for the lock hole diameter (Φ8 mm).
- An outdoor waterproof lock is recommended.
- Keep the key to the anti-theft lock.

Figure 4-18 Installing an anti-theft lock

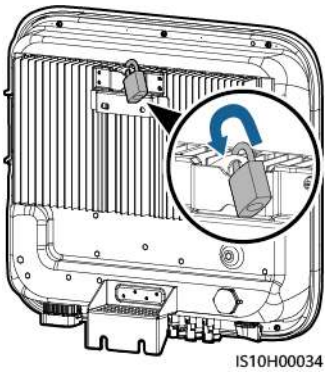

----End

5 Electrical Connections

5.1 Precautions

DANGER

When exposed to sunlight, the PV arrays supply DC voltage to the inverter. Before connecting cables, ensure that all **DC SWITCH** on the inverter are OFF. Otherwise, the high voltage of the inverter may result in electric shocks.

DANGER

- The site must be equipped with qualified fire fighting facilities, such as fire sand and carbon dioxide fire extinguishers.
- Wear personal protective equipment and use dedicated insulated tools to avoid electric shocks or short circuits.

WARNING

- The equipment damage caused by incorrect cable connections is beyond the warranty scope.
- Only certified electrician can perform electrical terminations.
- Operation personnel must wear PPE when connecting cables.
- Before connecting cables to ports, leave enough slack to reduce the tension on the cables and prevent poor cable connections.

 Copyright © Huawei Digital Power Technologies Co., Ltd.

CAUTION

- Stay away from the equipment when preparing cables to prevent cable scraps from entering the equipment. Cable scraps may cause sparks and result in personal injury and equipment damage.

NOTE

The cable colors shown in the electrical connection diagrams provided in this section are for reference only. Select cables in accordance with local cable specifications (green-and-yellow cables are only used for protective earthing).

5.2 Installation Preparation

Figure 5-1 SUN2000 cable connections (dashed boxes indicate optional components)

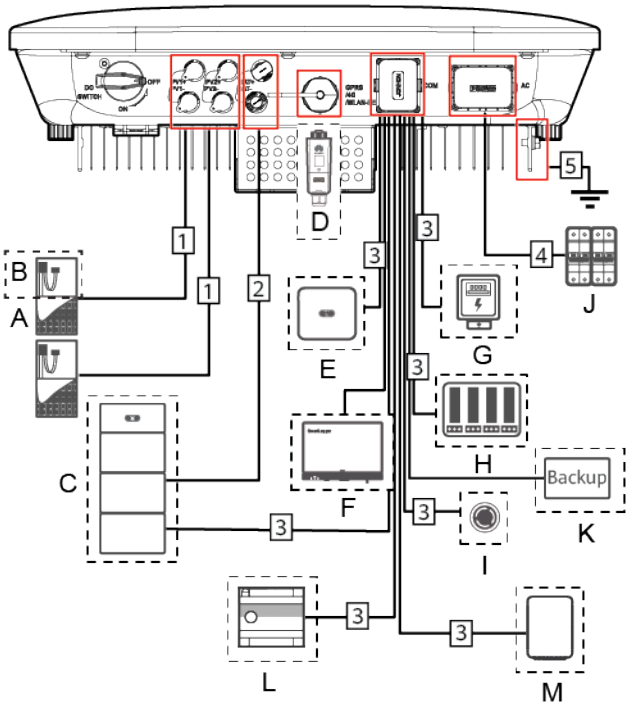

NOTICE

If a Smart Dongle is configured, it is recommended that you install it before connecting the signal cable.

 Copyright © Huawei Digital Power Technologies Co., Ltd.

Table 5-1 Component description

No.	Component	Description	Source
A	PV module	• A PV string is composed of the PV modules connected in series and can work with an optimizer. • The SUN2000 supports the input from two PV strings.	Prepared by users
B	(Optional) Smart PV optimizer	Supported models: SUN2000-(450W-P, 600W-P, 450W-P2) and SUN2000-600W-PA0[4].	Purchased from Huawei
C	(Optional) Battery	The LUNA2000 batteries can be connected to the SUN2000.	Purchased from Huawei
D	(Optional) Smart Dongle	Supported models: • WLAN-FE Smart Dongle: SDongleA-05 • 4G Smart Dongle: SDongleA-03 and SDongleB-06.	Purchased from Huawei
E	(Optional) SUN2000	Select a proper model as required.	Purchased from Huawei
F	(Optional) SmartLogger	Select a proper model as required.	Purchased from Huawei
G	(Optional) Power meter[1]	Recommended meter models: DTSU666-H, YDS60-C24[2], DTSU71 and DHSU1079-CT[3]	Purchased from Huawei
H	(Optional) Power grid scheduling device	Select the devices that meet the power grid scheduling requirements.	Provided by the local power grid company
I	(Optional) Rapid shutdown switch	Select a proper model as required.	Prepared by users

No.	Component	Description	Source
J	AC switch	To ensure that the inverter can be safely disconnected from the power grid when an exception occurs, connect an AC switch to the AC side of the inverter. Select an appropriate AC switch in accordance with local industry standards and regulations. Huawei recommends the following switch specifications: Recommended: a three-phase AC circuit breaker with a rated voltage greater than or equal to 380 V AC and a rated current of: ● 16 A (SUN2000-3KTL-M1, SUN2000-4KTL-M1, SUN2000-5KTL-M1, and SUN2000-6KTL-M1) ● 25 A (SUN2000-8KTL-M1, SUN2000-10KTL-BEM1 and SUN2000-10KTL-M1)	Prepared by users
K	(Optional) Smart Backup Box	Select a proper model as required.	Purchased from Huawei
L	(Optional) SmartAssistant	An energy management device used in a residential PV system.	Purchased from Huawei
M	(Optional) Smart Guard	The three-phase Smart Guard can be used to switch the inverter between on-grid and off-grid states. Supported models: SmartGuard-63A-T0 and SmartGuard-63A-AUT0	Purchased from Huawei

 Copyright © Huawei Digital Power Technologies Co., Ltd.

No.	Component	Description	Source
Note 1: For details about meter operations, **DTSU666-H 100 A and 250 A Smart Power Sensor User Manual**, **DTSU71 Smart Power Sensor Quick Guide**, **DHSU1079-CT Smart Power Sensor Quick Guide**, or **YDS60-C24 Smart Power Sensor Quick Guide**. Note 2: SUN2000MA V100R001C00SPC150 and later versions can connect to YDS60-C24 power meters. Note 3: SUN2000MA V100R001C00SPC160 and later versions can connect to DTSU71 and DHSU1079-CT power meters. Note 4: ● The SUN2000-(450W-P, 600W-P, 450W-P2) and SUN2000-600W-PA0 cannot be used together for the same inverter. ● The SUN2000-600W-PA0 optimizers apply only to the scenarios where optimizers are configured for all PV modules connected to an inverter or MPPT.			

Table 5-2 Cable description

No.	Name	Type	Recommended Specifications
1	DC input power cable	Common outdoor PV cable in the industry (Recommended model: PV1-F)	● Conductor cross-sectional area: 4–6 mm^2 ● Cable outer diameter: 5.5–9 mm
2	(Optional) Battery cable		
3	(Optional) Signal cable[a]	Outdoor shielded twisted pair	● Conductor cross-sectional area: 0.2–1 mm^2 ● Cable outer diameter: 4–11 mm
4	AC output power cable[b]	Outdoor copper cable	● Conductor cross-sectional area: 4–6 mm^2 ● Cable outer diameter: 10–21 mm
5	PE cable	Single-core outdoor copper-core cable	Conductor cross-sectional area: ≥ 4 mm^2

No.	Name	Type	Recommended Specifications
Note a: When the smart power sensor and battery are connected to the SUN2000 at the same time, use a cable core with a cross-sectional area of 0.2 mm^2 to 0.5 mm^2. Note b: The minimum cable diameter depends on the fuse rating on the AC side.			

NOTE

- The minimum cable cross-sectional area must meet local standards. Aluminum cables are prohibited.
- The factors that affect cable selection include the rated current, cable type, routing mode, ambient temperature, and maximum expected line loss.

5.3 Connecting the PE cable

Important Notes

DANGER

- Ensure that the PE cable is securely connected. Otherwise, electric shocks may occur.
- Do not connect the N wire to the enclosure as a PE cable. Otherwise, electric shocks may occur.

NOTE

- The PE point at the AC output port is used only as a PE equipotential point, not a substitute for the PE point on the enclosure.
- It is recommended that silica gel or paint be applied around the ground terminal after the PE cable is connected.

Supplementary Notes

The SUN2000 has the grounding detection function. This function is used to check whether the SUN2000 is properly grounded before the SUN2000 starts, or check whether the SUN2000 ground cable is disconnected when the SUN2000 is running. This function is used to check whether the SUN2000 is properly grounded under limited conditions. To ensure the safe operation of the SUN2000, properly ground the SUN2000 according to the connection requirements of the ground cable. For some power grid types, if the output side of the SUN2000 is connected to an isolation transformer, ensure that the SUN2000 is properly grounded and set **Isolation** to **Input ungrounded, with TF** to enable the SUN2000 to run properly.

- According to IEC 62109, to ensure the safe operation of the SUN2000 in the case of ground cable damage or disconnection, properly connect the ground

cable of the SUN2000 and ensure that it meets at least one of the following requirements before the grounding detection function becomes invalid.

- The ground cable is a single-core outdoor copper cable with a conductor cross-sectional area greater than or equal to 10 mm^2.
- Use cables with the same diameter as the AC output power cable and ground the PE terminal on the AC connector and the ground screw on the chassis.

- In some countries and regions, the SUN2000 must have additional ground cables. Use cables with the same diameter as the AC output power cable and ground the PE terminal on the AC connector and the ground screw on the chassis.

Procedure

Step 1 Crimp OT terminals.

NOTICE

- Avoid scratching the core wire when stripping a cable.
- The cavity formed after the conductor crimp strip of the OT terminal is crimped must wrap the core wires completely. The core wires must contact the OT terminal closely.
- Wrap the wire crimping area with heat shrink tubing or PVC insulation tape. The heat shrink tubing is used as an example.
- When using a heat gun, protect devices from being scorched.

Figure 5-2 Crimping an OT terminal

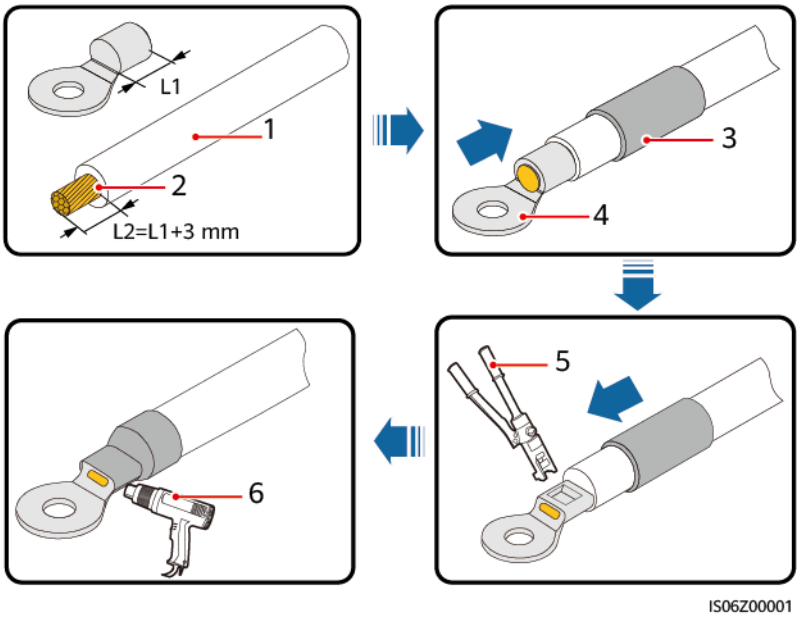

(1) Cable (2) Core (3) Heat shrink tubing

(4) OT terminal (5) Crimping tool (6) Heat gun

Step 2 Connect the PE cable.

Figure 5-3 Connecting the PE cable

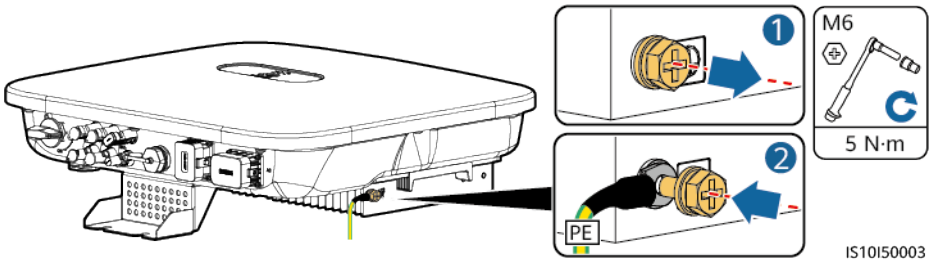

----End

5.4 Connecting the AC Output Power Cable

Precautions

A three-phase AC switch needs to be installed on the AC side of the SUN2000. To ensure that the SUN2000 can safely disconnect itself from the power grid when an exception occurs, select a proper overcurrent protection device in compliance with local power distribution regulations.

WARNING

- Do not connect loads between an inverter and an AC switch that directly connects to the inverter. Otherwise, the switch may trip by mistake.
- If an AC switch is used with specifications beyond local standards, regulations, or the Company's recommendations, the switch may fail to turn off in a timely manner in case of exceptions, causing serious faults.

CAUTION

Each inverter shall be equipped with an AC output switch. Multiple inverters shall not connect to the same AC switch.

The SUN2000 is integrated with a comprehensive residual current monitoring unit. Once detecting that the residual current exceeds the threshold, the SUN2000 immediately disconnects itself from the power grid.

NOTICE

- If the external AC switch can perform earth leakage protection, the rated leakage action current should be greater than or equal to 100 mA.
- If multiple SUN2000s connect to the general residual current device (RCD) through their respective external AC switches, the rated leakage action current of the general RCD should be greater than or equal to the number of SUN2000s multiplied by 100 mA.
- A knife switch cannot be used as an AC switch.

Procedure

Step 1 Connect the AC output power cable to the AC connector.

Figure 5-4 Stripping requirements

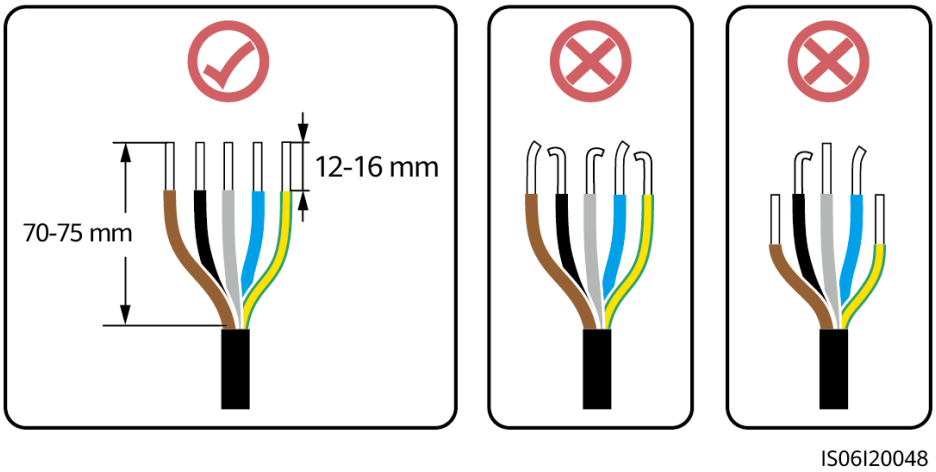

NOTICE

- Ensure that the cable jacket is inside the connector.
- Ensure that the exposed core wire is totally inserted into the cable hole.
- Ensure that AC terminations provide firm and solid electrical connections. Failing to do so may cause SUN2000 malfunction and damage to its AC connectors.
- Ensure that the cable is not twisted.

NOTICE

Strip the insulation layers of the AC output power cable by the recommended length (12–16 mm) to ensure that the cable conductors are completely inside the conductor insertion points and no insulation layer is pressed into the conductor insertion points. Otherwise, the device may fail to run properly or be damaged during operation.

 Copyright © Huawei Digital Power Technologies Co., Ltd.

Figure 5-5 Three-core cable (L1, L2, and L3)

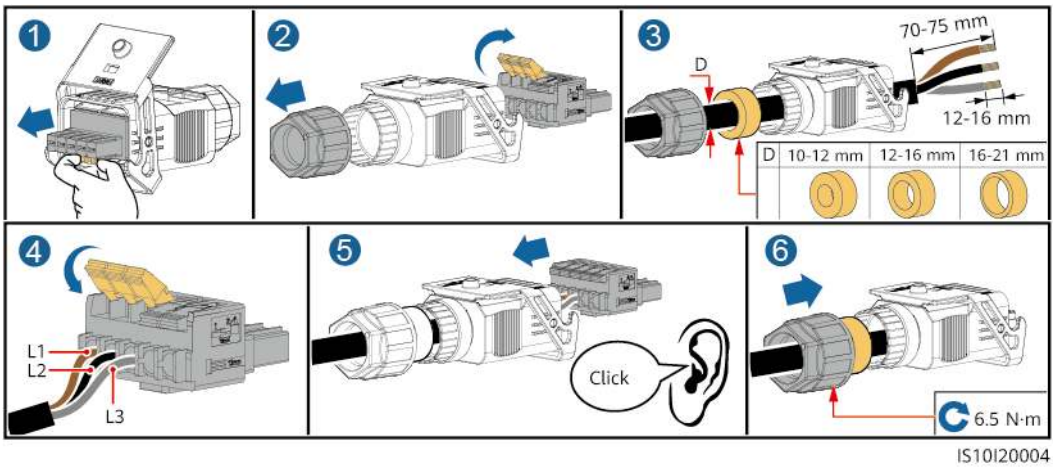

Figure 5-6 Four-core cable (L1, L2, L3, and PE)

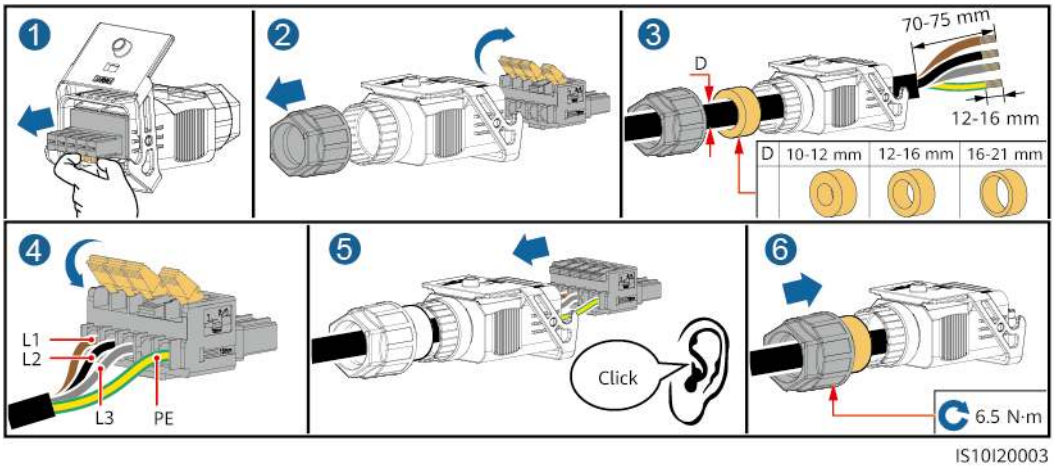

Figure 5-7 Four-core cable (L1, L2, L3, and N)

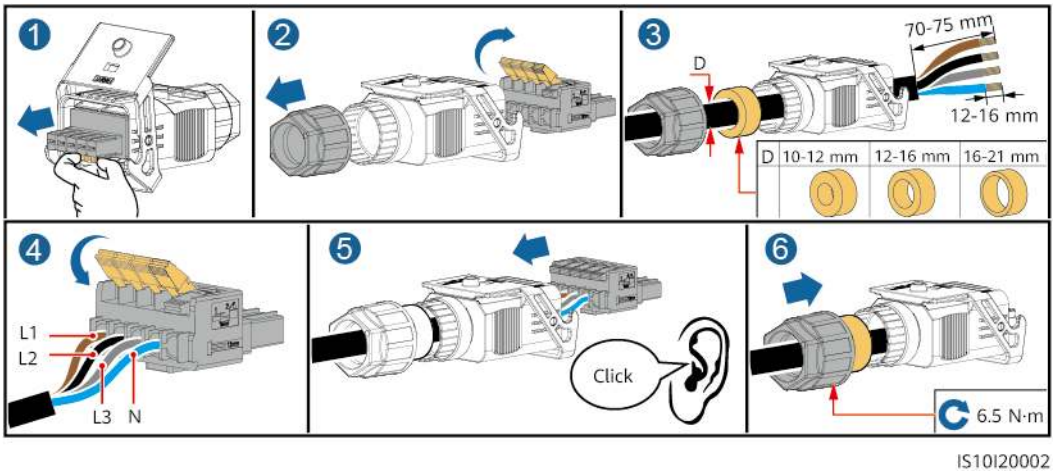

 Copyright © Huawei Digital Power Technologies Co., Ltd.

Figure 5-8 Five-core cable (L1, L2, L3, N, and PE)

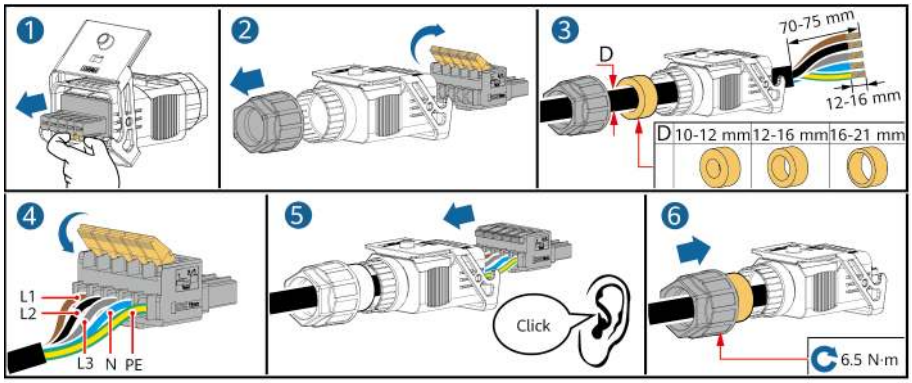

IS10I20001

NOTE

The cable colors shown in the figures are for reference only. Select an appropriate cable according to local standards.

Step 2 Connect the AC connector to the AC output port.

NOTICE

Ensure that the AC connector is connected securely.

Figure 5-9 Securing the AC connector

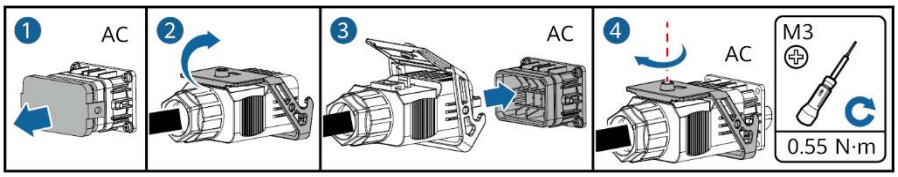

IS10I20005

Step 3 Check the route of the AC output power cable.

Figure 5-10 Cable route

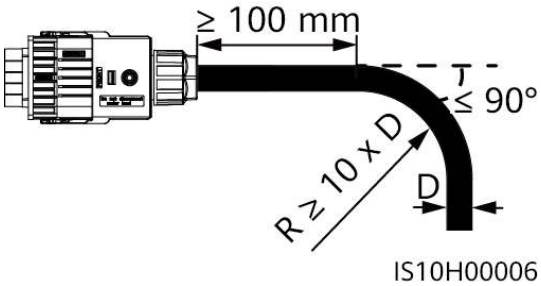

IS10H00006

----End

Disconnection

Disconnection can be performed in reverse order.

5.5 Installing DC Input Power Cables

Important Notes

DANGER

- Before connecting the DC input power cable, ensure that the DC voltage is within the safe range (lower than 60 V DC) and that the DC switch on the SUN2000 is OFF. Otherwise, electric shocks may occur.
- When the SUN2000 is operating, it is not allowed to work on the DC input power cables, such as connecting or disconnecting a PV string or a PV module in a PV string. Otherwise, electric shocks may occur.
- If no PV string connects to a DC input terminal of the SUN2000, do not remove the watertight cap from the DC input terminals. Otherwise, the IP rating of the SUN2000 will be affected.

WARNING

Ensure that the following conditions are met. Otherwise, the SUN2000 may be damaged, or even fire could happen.

- PV modules connected in series in each PV string are of the same specifications.
- The open-circuit voltage of each PV string must always be 1100 V DC or lower.
- The maximum short-circuit current of each PV string must always be 15 A or lower.
- The polarities of electric connections are correct on the DC input side. The positive and negative terminals of a PV string connect to corresponding positive and negative DC input terminals of the SUN2000.
- If polarity of the DC input power cable is reversed, do not turn off the DC switch immediately or remove positive and negative connectors. Wait until the solar irradiance declines at night and the PV string current reduces to below 0.5 A, and then turn off the DC switch and remove the positive and negative connectors. Correct the PV string polarity before reconnecting the PV string to the SUN2000.

WARNING

During the installation of PV strings and the inverter, the positive or negative terminals of PV strings may be short-circuited to ground if the power cables are not properly installed or routed. In this case, an AC or DC short circuit may occur and damage the inverter. The resulting device damage is not covered under any warranty.

 Copyright © Huawei Digital Power Technologies Co., Ltd.

NOTICE

Since the output of the PV string connected to the SUN2000 cannot be grounded, ensure that the PV module output is well insulated to ground.

Terminal Description

Figure 5-11 Terminal

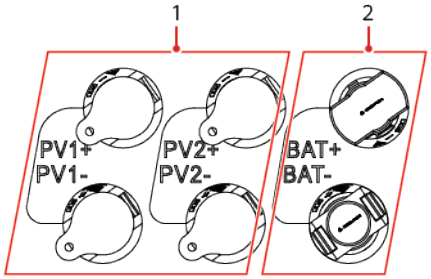

(1) DC input terminal

(2) Battery terminal

Figure 5-12 Correct wiring terminals

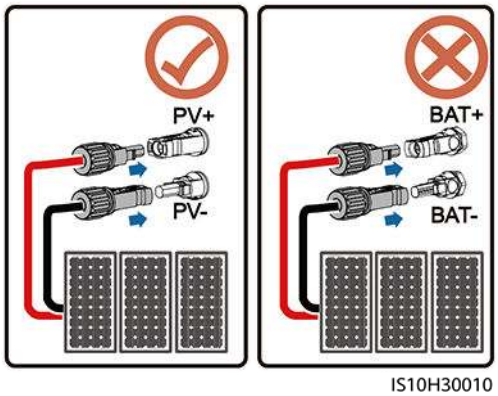

Procedure

Step 1 Install the DC input power cables.

WARNING

Before inserting the positive and negative connectors into the positive and negative DC input terminals of the SUN2000, ensure that the DC switch is set to OFF.

 Copyright © Huawei Digital Power Technologies Co., Ltd.

CAUTION

Use the positive and negative Staubli MC4 metal terminals and DC connectors supplied with the SUN2000. Using incompatible positive and negative metal terminals and DC connectors may result in serious consequences. The caused device damage is not covered under warranty.

NOTICE

- Cables with high rigidity, such as armored cables, are not recommended as DC input power cables, because poor contact may be caused by the bending of the cables.
- Before assembling DC connectors, label the cable polarities correctly to ensure correct cable connections.
- After crimping the positive and negative metal terminals, pull back the DC input power cables to ensure that they are securely connected.
- Insert the crimped metal terminals of the positive and negative power cables into the appropriate positive and negative connectors. Then pull back the DC input power cables to ensure that they are connected securely.
- If a DC input power cable is reversely connected and the DC switch is turned on, do not operate on the DC switch or the positive/negative connectors immediately. Otherwise, the device may be damaged. The caused device damage is not covered under any warranty. Wait until the solar irradiance declines at night and the PV string current reduces to below 0.5 A, and then turn off the DC switch and remove the positive and negative connectors. Correct the PV string polarity before reconnecting the PV string to the SUN2000.
- During DC input power cabling, leave at least 50 mm of slack. The axial tension on PV connectors must not exceed 80 N. Radial stress or torque must not be generated on PV connectors.

NOTE

- The DC voltage measurement range of the multimeter must be at least 1100 V.
- If the voltage is a negative value, the DC input polarity is incorrect. Correct the polarity.
- If the voltage is greater than 1100 V DC, too many PV modules configured to the same string. Remove some PV modules.
- If the PV string is configured with an optimizer, check the cable polarity by referring to the smart PV optimizer quick guide.

 Copyright © Huawei Digital Power Technologies Co., Ltd.

Figure 5-13 Installing DC input power cables

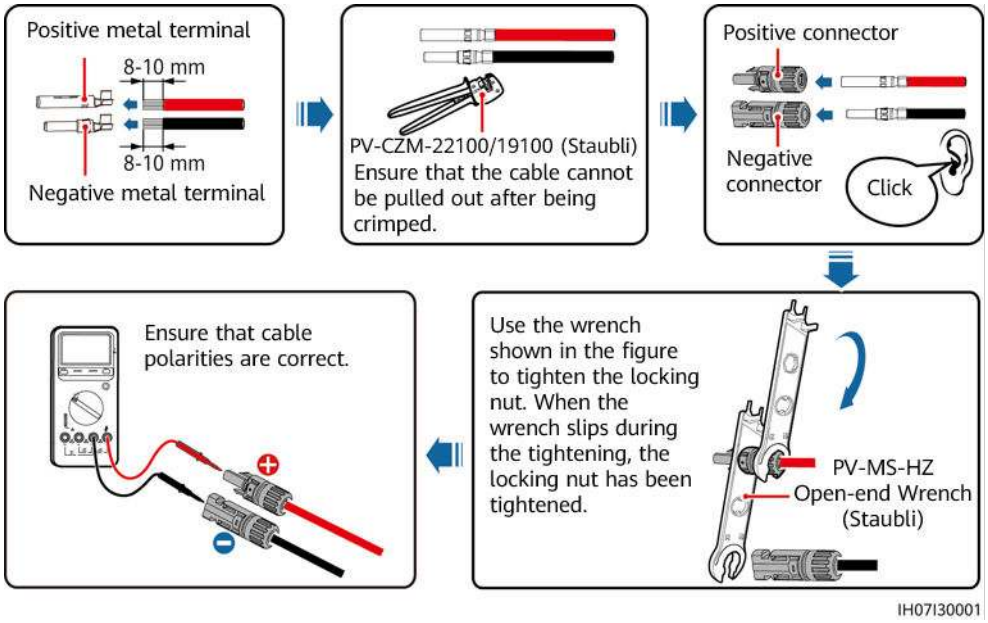

----End

Removing DC Connectors

WARNING

Before removing the positive and negative connectors, ensure that the DC switch is OFF.

To remove the positive and negative connectors from the SUN2000, insert an open-end wrench into the bayonet and press the wrench with force. Then remove the DC connectors with caution.

Figure 5-14 Removing DC connectors

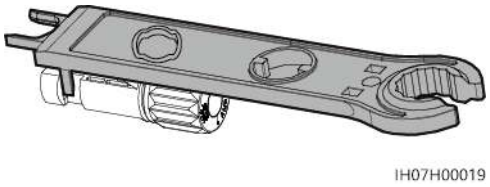

5.6 (Optional) Connecting Battery Cables

Prerequisites

DANGER

- Battery short-circuit may cause personal injury. The high transient current generated by a short-circuit may release a surge of energy and cause fire.
- Do not connect or disconnect the battery cables when the SUN2000 is running. Otherwise, electric shocks may occur.
- Before connecting the battery cables, ensure that the DC switch on the SUN2000 and all the switches connecting to the SUN2000 are OFF, and the SUN2000 has no residual electricity. Otherwise, the high voltage of the SUN2000 and battery may result in electric shocks.
- If no battery connects to the SUN2000, do not remove the watertight caps from the battery terminals. Otherwise, the protection level of the SUN2000 will be affected. If a battery connects to the SUN2000, set aside the watertight caps. Reinstall the watertight caps immediately after removing the connectors.

A battery switch can be configured between the SUN2000 and the battery to ensure that the SUN2000 can be safely disconnected from the battery.

WARNING

- Do not connect loads between the SUN2000 and the battery.
- The battery cables should be connected correctly. That is, the positive and negative terminals of the battery connect to the positive and negative battery terminals on the SUN2000 respectively. Otherwise, the SUN2000 may be damaged, or even fire could happen.

WARNING

During the installation of batteries and the SUN2000, the positive or negative terminals of batteries may be short-circuited to ground if the power cable is not properly installed or routed. In this case, an AC or DC short circuit may occur and damage the SUN2000. The caused device damage is not covered under any warranty.

Procedure

Step 1 Assemble the positive and negative connectors by referring to **5.5 Installing DC Input Power Cables**.

DANGER

- The battery voltage may result in serious injury. Use dedicated insulation tools when connecting cables.
- Ensure that cables are correctly connected between the battery terminal and the battery switch, and between the battery switch and the SUN2000 battery terminal.

NOTICE

Cables with high rigidity, such as armored cables, are not recommended as battery cables, because poor contact may be caused by the bending of the cables.

Step 2 Insert the positive and negative connectors into corresponding battery terminals on the SUN2000.

NOTICE

After the positive and negative connectors snap into place, pull the battery cables back to ensure that they are connected securely.

Figure 5-15 Connecting battery cables

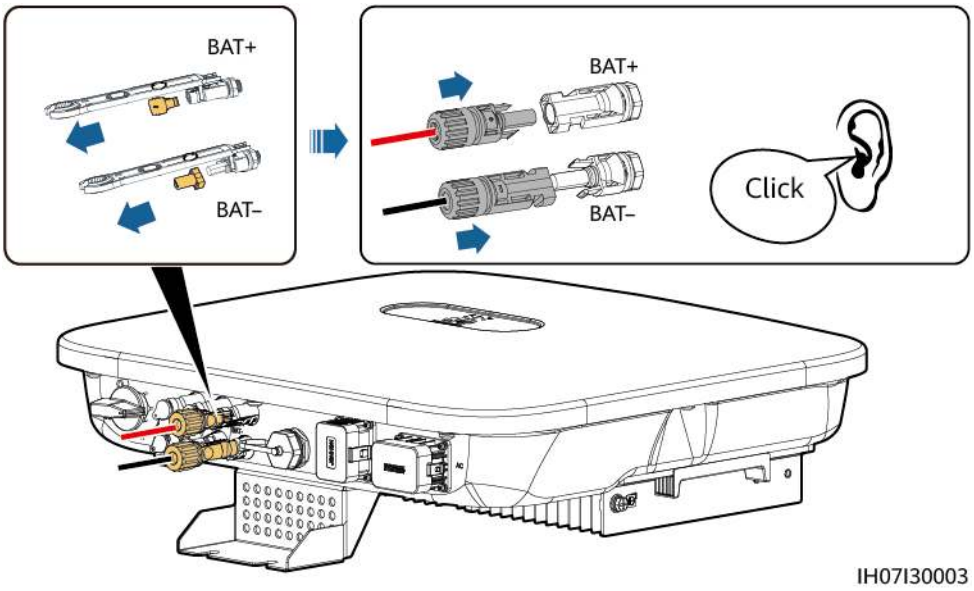

----End

5.7 (Optional) Installing the Smart Dongle and Anti-theft Components

NOTE

- If WLAN-FE communication is used, install the WLAN-FE Smart Dongle (SDongleA-05). For details, see **SDongleA-05 Smart Dongle Quick Guide (WLAN-FE)**.
- If 4G communication is used, install the 4G Smart Dongle (SDongleB-06). For details, see **SDongleB-06 Smart Dongle Quick Guide (4G)**.
- If the Smart Dongle is used, you need to install anti-theft components after installing the Smart Dongle.

WLAN-FE Smart Dongle (FE Communication)

You are advised to use a CAT 5E outdoor shielded network cable (outer diameter < 9 mm; internal resistance ≤ 1.5 ohms/10 m) and shielded RJ45 connectors.

Figure 5-16 Installing the WLAN-FE Smart Dongle (FE communication)

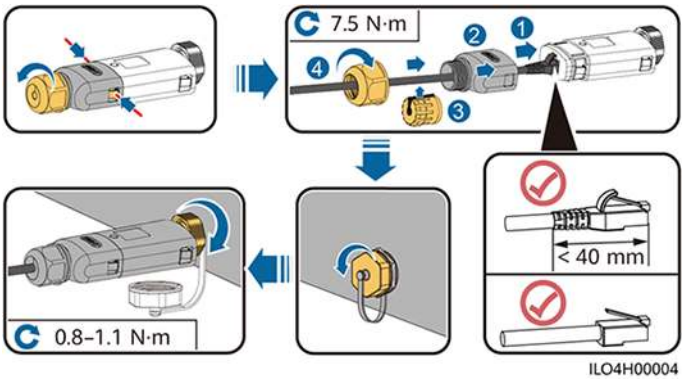

Figure 5-17 Installing anti-theft components for the Smart Dongle

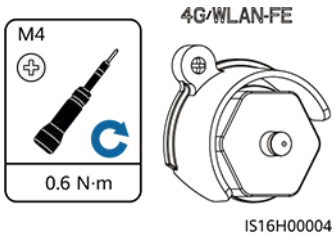

4G Smart Dongle (4G Communication)

NOTE

- If your Smart Dongle is not configured with a SIM card, you need to prepare one (dimensions: 25 mm x 15 mm; capacity: ≥ 64 KB).
- When installing the SIM card, determine its installation direction based on the silk screen and arrow on the card slot.
- Press the SIM card in place to lock it. In this case, the SIM card is correctly installed.
- When removing the SIM card, push it inward to eject it.
- When reinstalling the enclosure of the Smart Dongle, ensure that the snap-fits click into place.

Figure 5-18 Installing the 4G Smart Dongle (SDongleB-06)

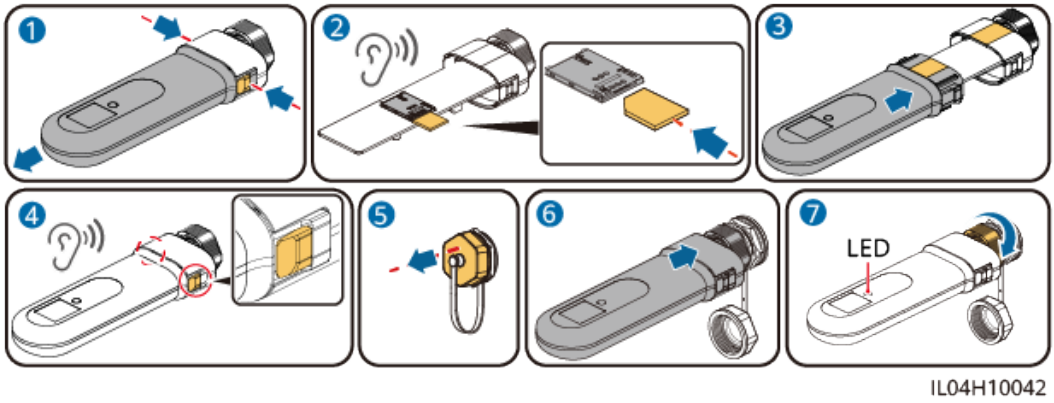

Figure 5-19 Installing anti-theft components for the Smart Dongle

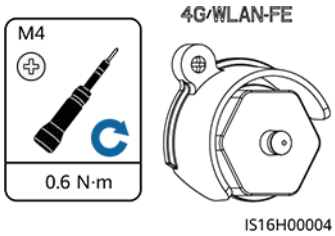

5.8 (Optional) Connecting Signal Cables

Communications Port Pin Definitions

NOTICE

- When laying out a signal cable, separate it from power cables and keep it away from strong interference sources to prevent communication interruption.
- Ensure that the protection layer of the signal cable is inside the connector, surplus core wires are cut off from the protection layer, the exposed core wires are inserted completely into the holes, and the cable is connected securely.
- Use rubber plugs to fill the cable holes where no cables are routed through the waterproof rubber rings, and tighten the locking caps to the recommended torque.

 Copyright © Huawei Digital Power Technologies Co., Ltd.

Figure 5-20 Pin definitions

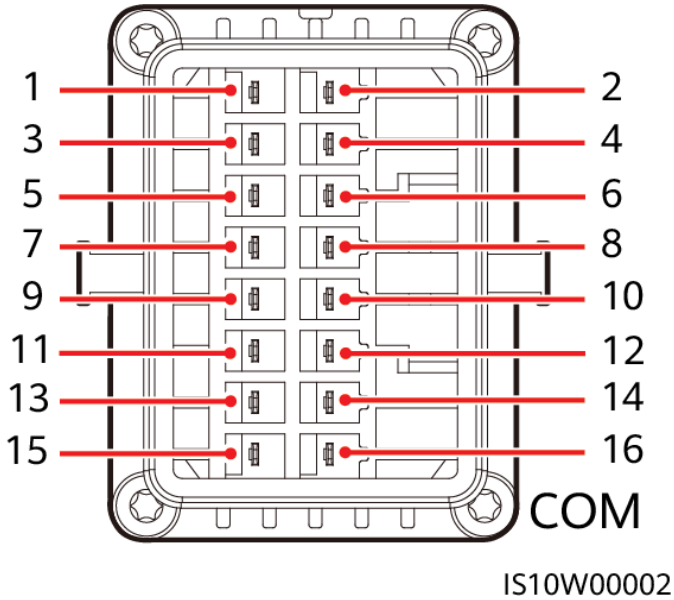

NOTE

- If the RS485 communications cables of devices, such as the Smart Power Sensor and battery, are connected to the inverter at the same time, RS485A2 (pin 7), RS485B2 (pin 9), and PE (pin 5) are shared.
- When the enabling signal cables of the battery and the rapid shutdown switch signal cables are connected to the inverter at the same time, GND (pin 13) is shared.

Pin	Definition	Function	Description	Pin	Definition	Function	Description
1	485A1-1	RS485A, RS485 differential signal+	Used for cascading inverters or connecting to the RS485 signal port of the SmartLogger, SmartAssistant, or Smart Guard	2	485A1-2	RS485A, RS485 differential signal+	Used for cascading inverters or connecting to the RS485 signal port of the SmartLogger, SmartAssistant, or Smart Guard
3	485B1-1	RS485B, RS485 differential signal–		4	485B1-2	RS485B, RS485 differential signal–	
5	PE	Shield layer grounding	-	6	PE	Shield layer grounding	-

Pin	Definition	Function	Description	Pin	Definition	Function	Description
7	485A2	RS485A, RS485 differential signal+	Connecting to RS485 signal ports of devices such as power meters and batteries	8	DIN1	Digital input signal 1+	Connecting to the dry contact for power grid scheduling or used as the feedback signal port for the Backup Box or Smart Guard
9	485B2	RS485B, RS485 differential signal–		10	DIN2	Digital input signal 2+	Connecting to the dry contact for power grid scheduling
11	EN	Enable signal	For the enable signal of the battery	12	DIN3	Digital input signal 3+	
13	GND	GND	-	14	DIN4	Digital input signal 4+	Connecting to the dry contact for power grid scheduling or the ripple control receiver for load power control
15	DIN5	Rapid shutdown	Used for the rapid shutdown DI signal or connecting to the signal cable of an NS protection device	16	GND	GND of DIN1, DIN2, DIN3, or DIN4	Connecting to GND of DIN1, DIN2, DIN3, or DIN4

Communication Networking Mode

Only one networking mode applies to an inverter.

- Smart Dongle networking

Figure 5-21 Smart Dongle networking (the components in the dashed box are optional)

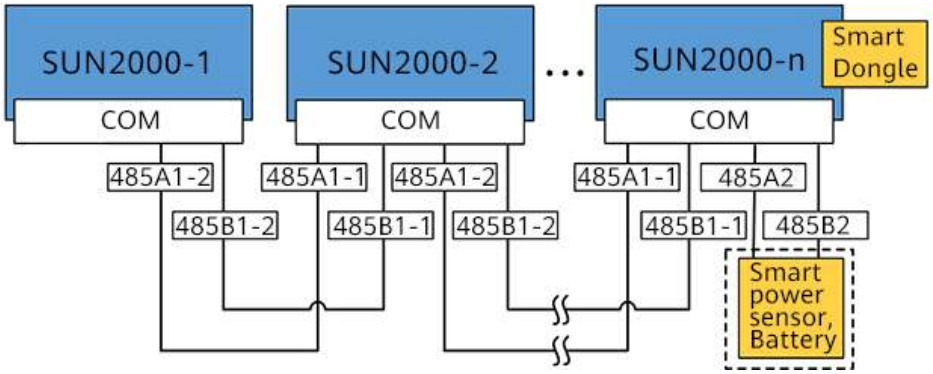

Table 5-3 Usage restrictions

Smart Dongle	Usage Restrictions	Actual Connection	
	Maximum Number of Devices That Can Be Connected to the Smart Dongle	**Number of Inverters**	**Number of Other Devices[b]**
4G[a]	10	n ≤ 10	≤ 10-n
	2	n ≤ 2	≤ 2–n
WLAN-FE	10	n ≤ 10	≤ 10–n
Note a: The maximum number of devices that can be connected to a Smart Dongle is written in the label on the outer package. Note b: If the power meter and battery are connected through the RS485A2 and RS485B2 ports, they are not included as cascaded devices.			

NOTE

- A power meter is required for export limitation. Select a power meter based on the site requirements.
- The power meter and the Smart Dongle must be connected to the same inverter.
- If a battery is connected to the system, a maximum of three inverters can be cascaded, any of which can be connected to the battery (the inverter connected to the Smart Dongle must be connected to the battery).
- If the SUN2000-(3KTL-12KTL)-M1 series and SUN2000-(2KTL-6KTL)-L1 inverters are cascaded, a maximum of three inverters can be cascaded.
- In new deployment and capacity expansion scenarios, it is recommended that multiple single-phase inverters or multiple three-phase inverters be connected in parallel.

- SmartLogger networking

Figure 5-22 SmartLogger networking (the component in the dashed box is optional)

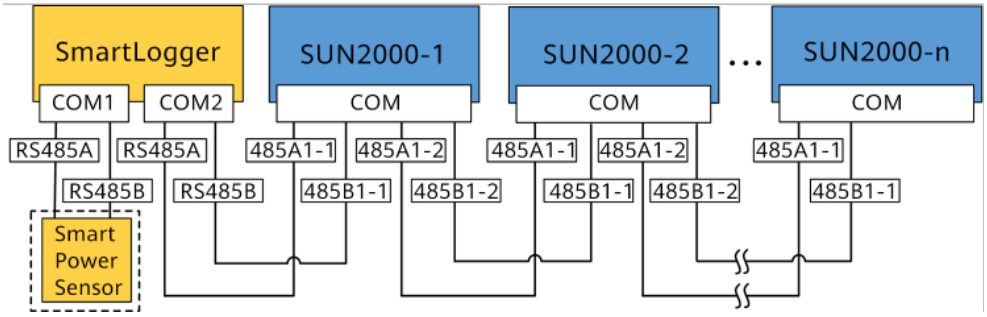

NOTE

- A maximum of 80 devices can connect to a single SmartLogger. You are advised to connect fewer than 30 devices to each RS485 route.
- If the inverter is connected to the SmartLogger, it cannot be connected to the Smart Dongle.
- A power meter is required for export limitation. Select a power meter based on the site requirements.
- To ensure quick responses of the system, you are advised to connect the power meter separately to a COM port.

- SmartAssistant networking

Figure 5-23 SmartAssistant networking (the component in the dashed box is optional)

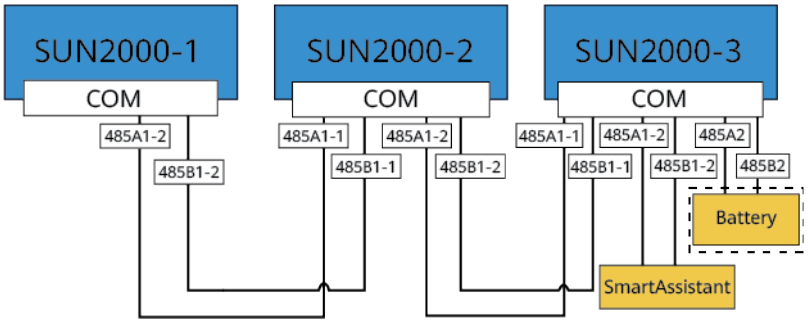

- Smart Guard networking

Figure 5-24 Smart Guard networking (the component in the dashed box is optional)

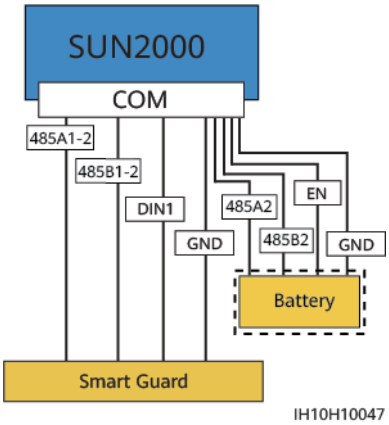

5.8.1 Connecting the RS485 Communications Cable (Inverter Cascading)

Procedure

Step 1 Connect the signal cable to the signal cable connector.

Figure 5-25 Installing the cable

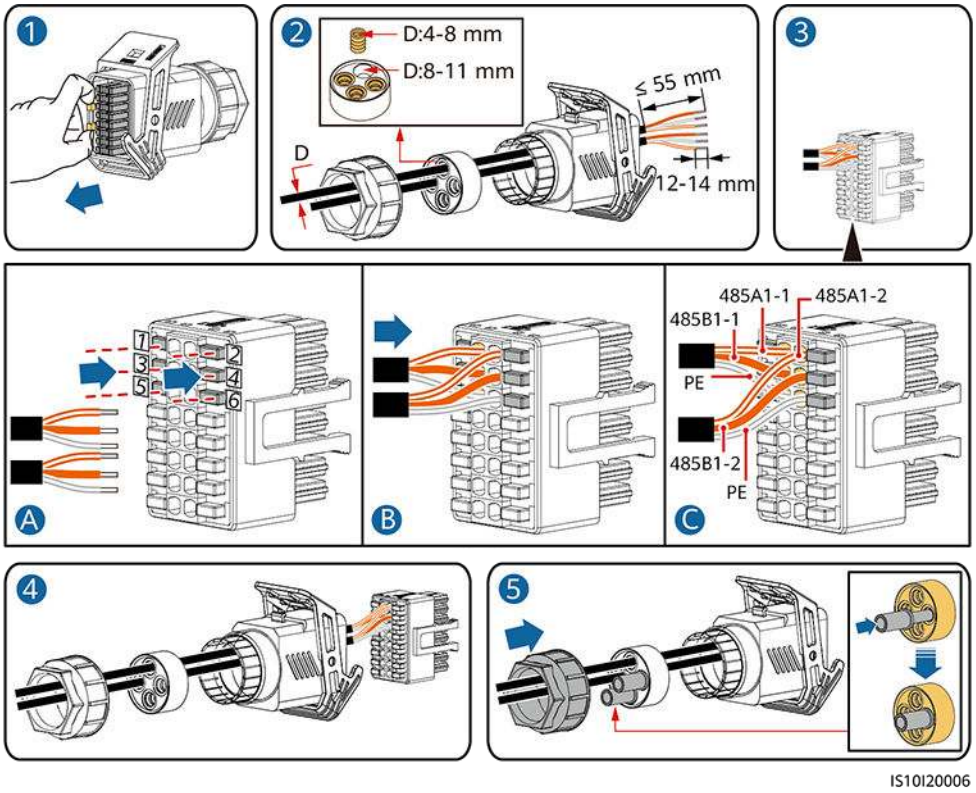

Step 2 Connect the signal cable connector to the COM port.

Figure 5-26 Securing the signal cable connector

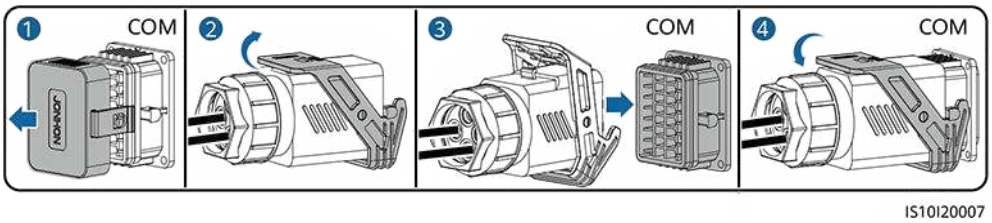

----End

5.8.2 Connecting the RS485 Communications Cable (Smart Power Sensor)

Cable Connection

The following figures show the cable connections between the inverter and DTSU666-H and YDS60-C24 meters.

NOTE

The cable connections between the DTSU71 and DHSU1079-CT power meters and the inverter are the same as those between the DTSU666-H power meter and the inverter.

Figure 5-27 DTSU666-H three-phase, three-wire cable connection (Smart Dongle networking)

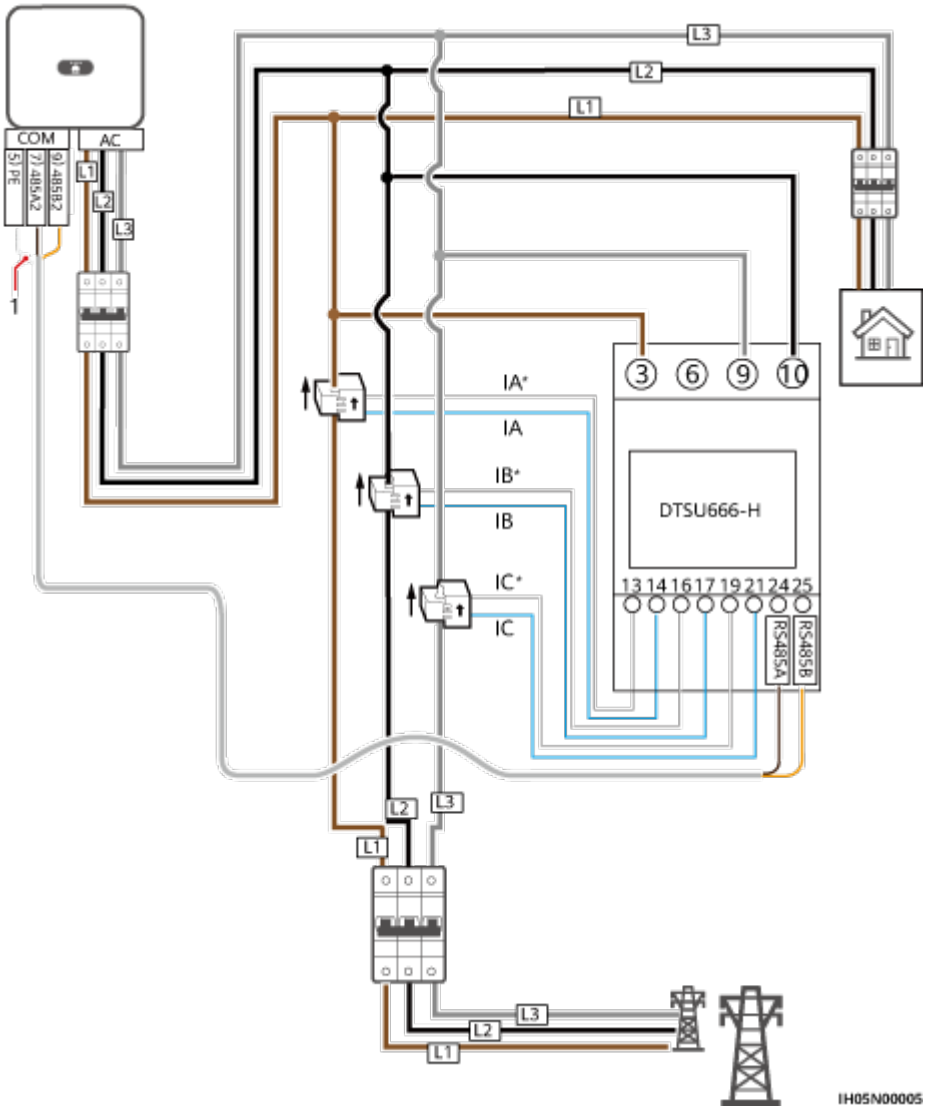

Figure 5-28 YDS60-C24 three-phase, three-wire cable connection (Smart Dongle networking)

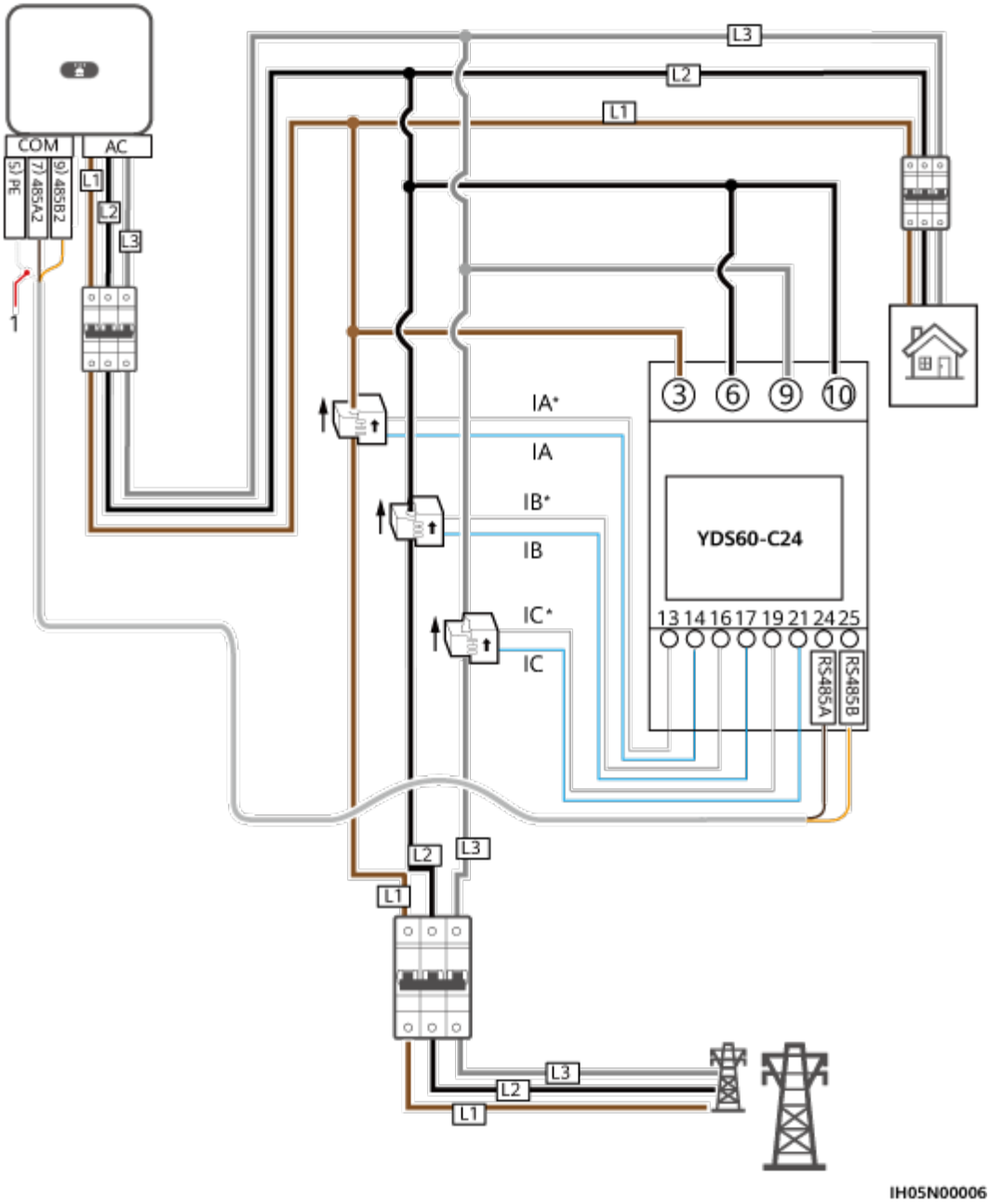

Figure 5-29 Three-phase, four-wire connection (Smart Dongle networking)

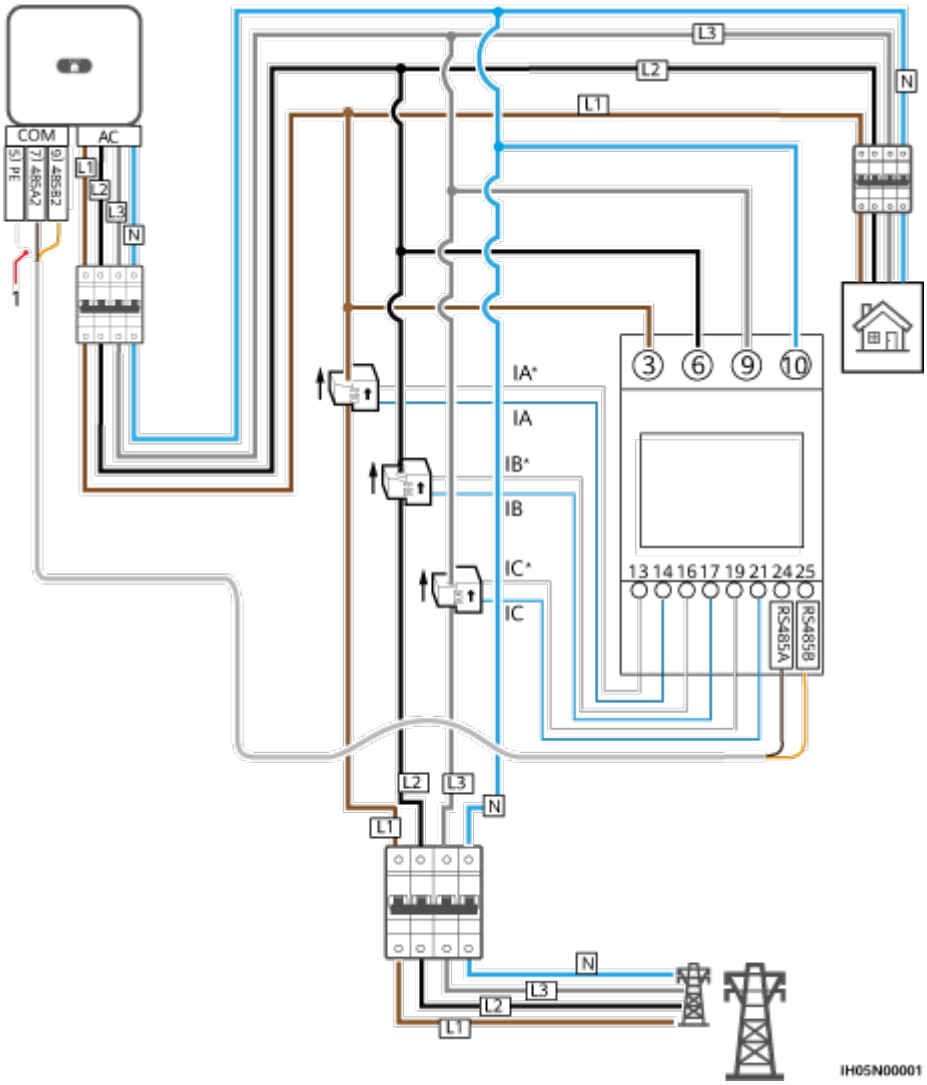

(1) Shielding layer of the signal cable

NOTE

- If the SUN2000-(2KTL-6KTL)-L1 are cascaded with three-phase inverters, they must be connected to the grid in the same phase.
- In new-deployment or capacity expansion scenarios with multiple inverters, you are advised to connect either single-phase or three-phase inverters in parallel.
- For a three-phase three-wire system, you need to set the cable connection mode. Otherwise, the displayed voltage is incorrect.
- Ensure that the baud rates of the DTSU666-H, YDS60-C24, DTSU71 and DHSU1079-CT meters are set to the default values. If they are changed, meters may go offline, generate alarms, or affect the inverter output power.

Table 5-4 Select the cable connection mode

Parameter	Note
nEt	Select the cable connection mode: 0: n.34 indicates three-phase four-wire. 1: n.33 indicates three-phase three-wire.

Procedure

Step 1 Connect the signal cable to the signal cable connector.

Figure 5-30 Installing the cable

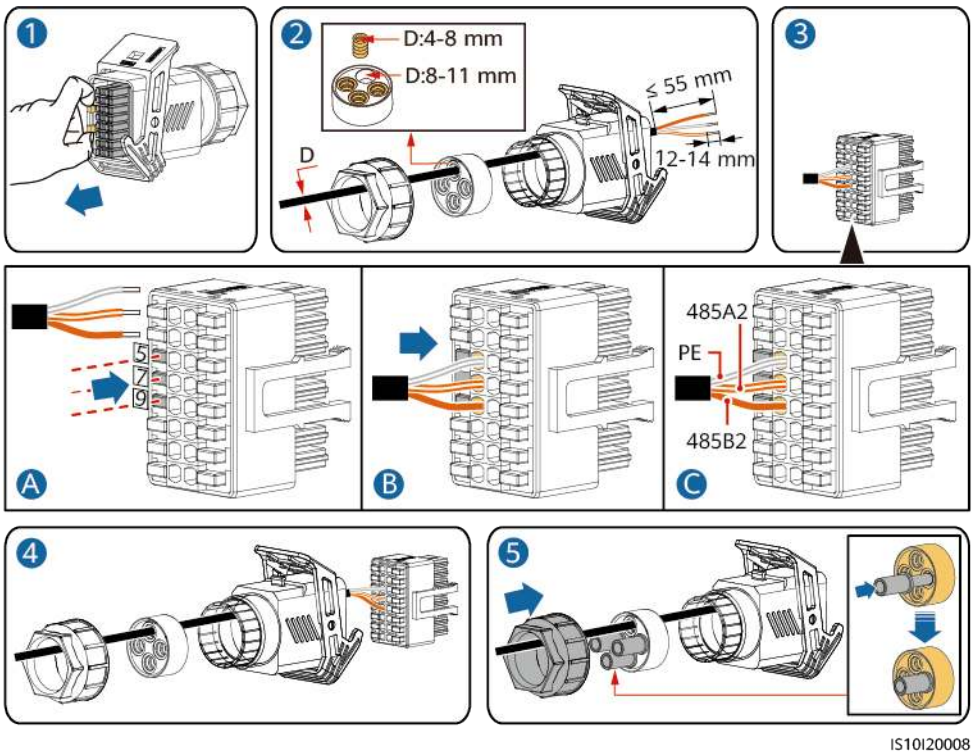

Step 2 Connect the signal cable to the COM port.

Figure 5-31 Securing the signal cable connector

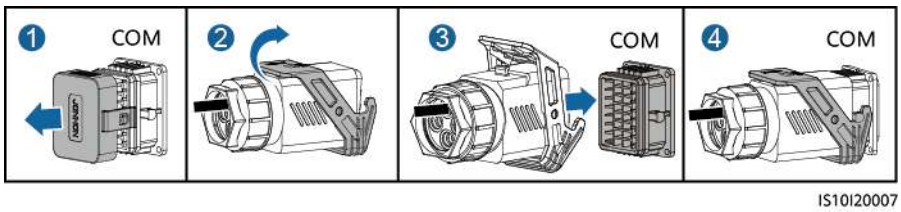

----End

5.8.3 Connecting an RS485 Communications Cable (Between a Power Meter and a Battery)

Procedure

Step 1 Connect the signal cable to the signal cable connector.

Figure 5-32 Installing the cable

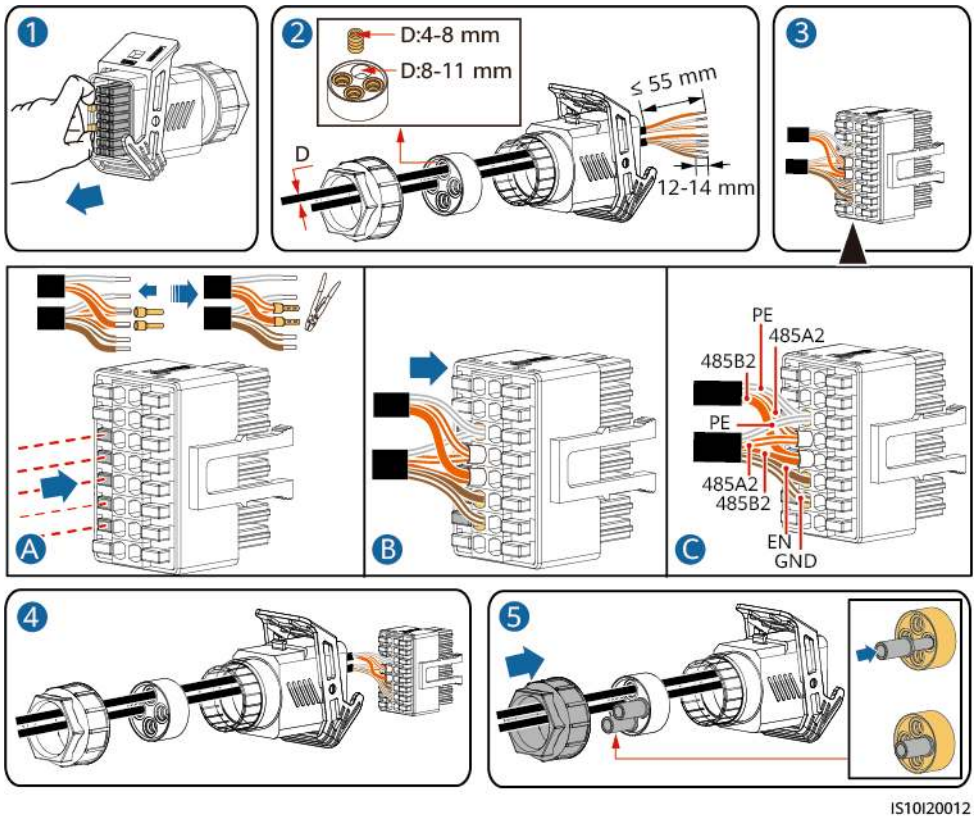

Step 2 Connect the signal cable connector to the COM port.

Figure 5-33 Securing the signal cable connector

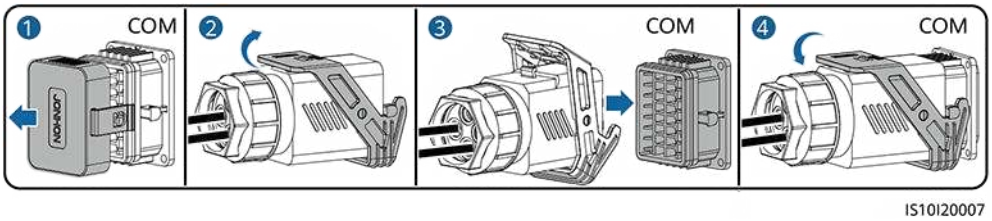

----End

5.8.4 Connecting RS485 Communications Cables (SmartAssistant)

Procedure

Step 1 Connect the signal cable to the signal cable connector.

Figure 5-34 Installing the cable

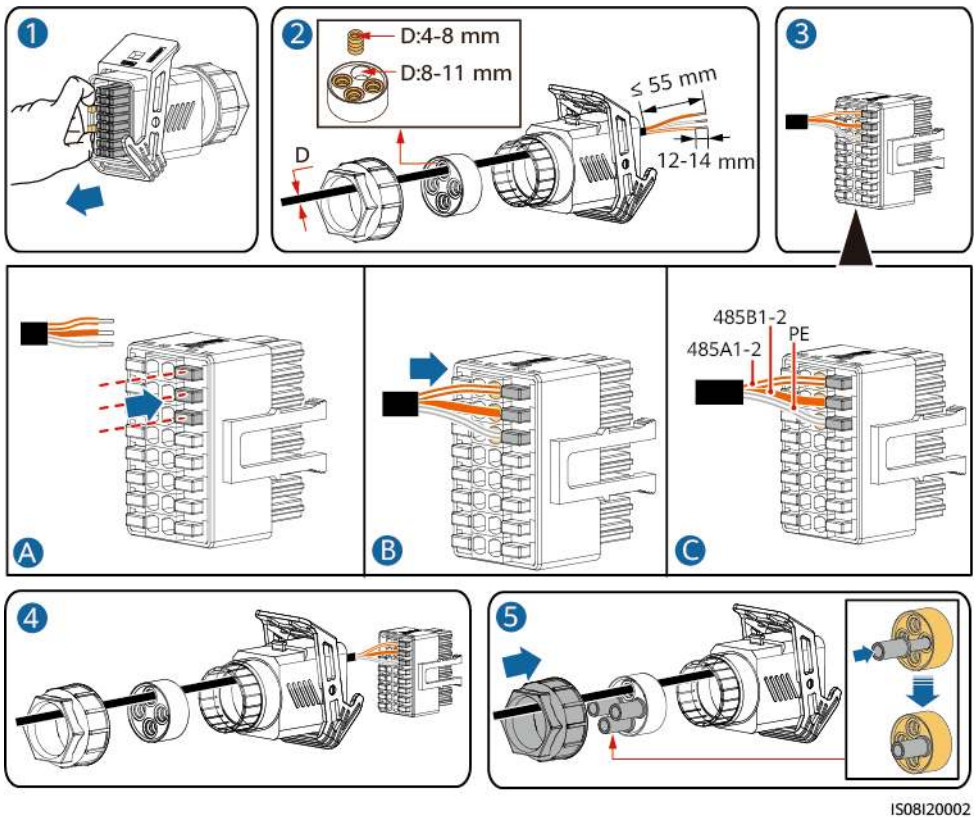

Step 2 Connect the signal cable connector to the COM port.

Figure 5-35 Securing the signal cable connector

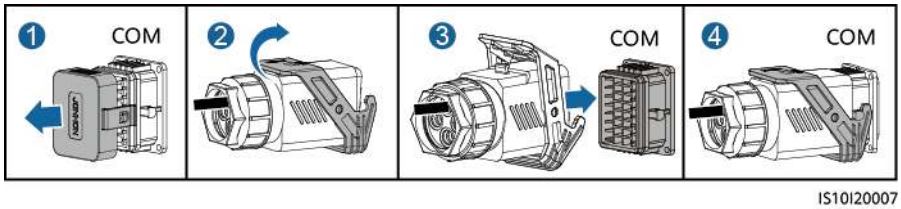

----End

5.8.5 Connecting RS485 Communications Cables (SmartAssistant and Battery)

Procedure

Step 1 Connect signal cables to the signal cable connector.

Figure 5-36 Installing cables

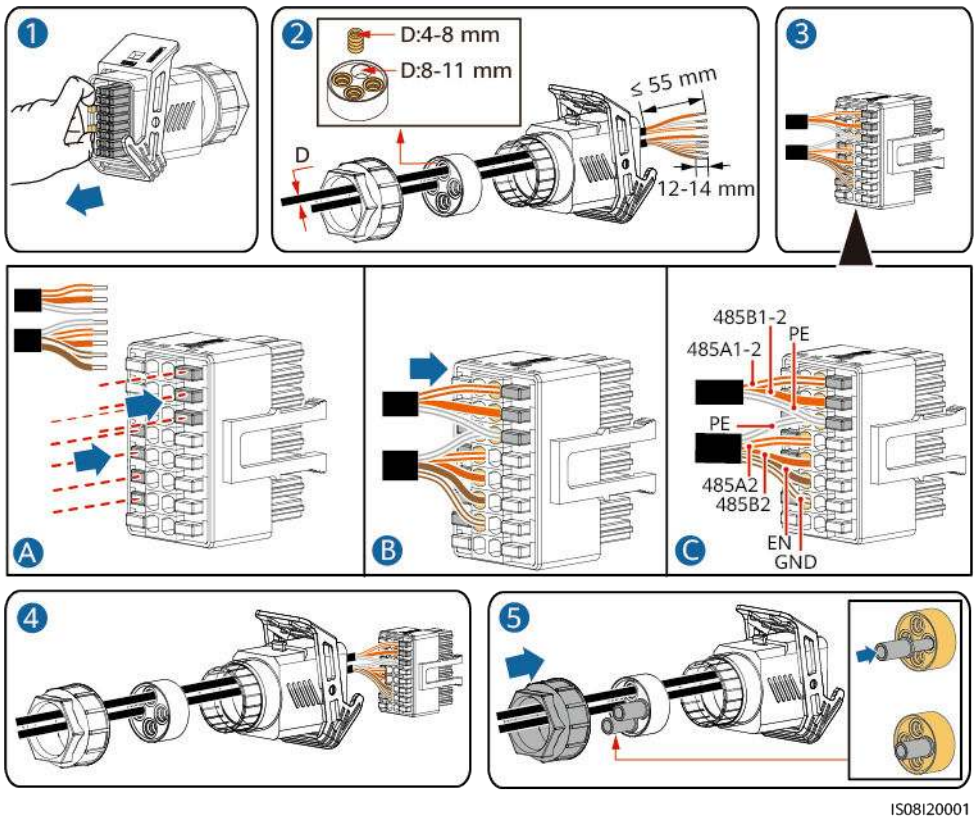

Step 2 Connect the signal cable connector to the COM port.

Figure 5-37 Securing the signal cable connector

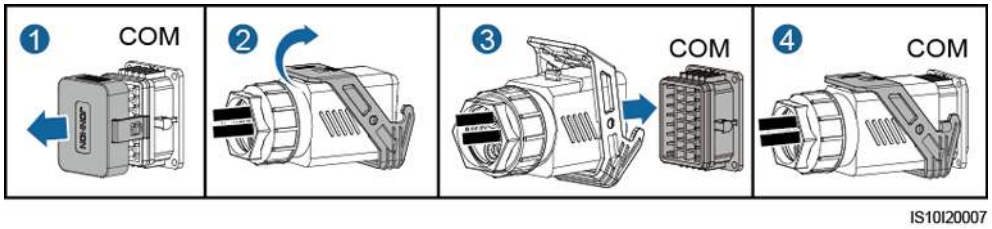

----End

5.8.6 Connecting RS485 Communications Cables (Smart Guard)

Procedure

NOTE

When connecting RS485A1 and B1, you can connect pin 1 and pin 3 or pin 2 and pin 4. These two connection methods are equivalent.

Step 1 Connect the signal cable to the signal cable connector.

Figure 5-38 Installing the cable

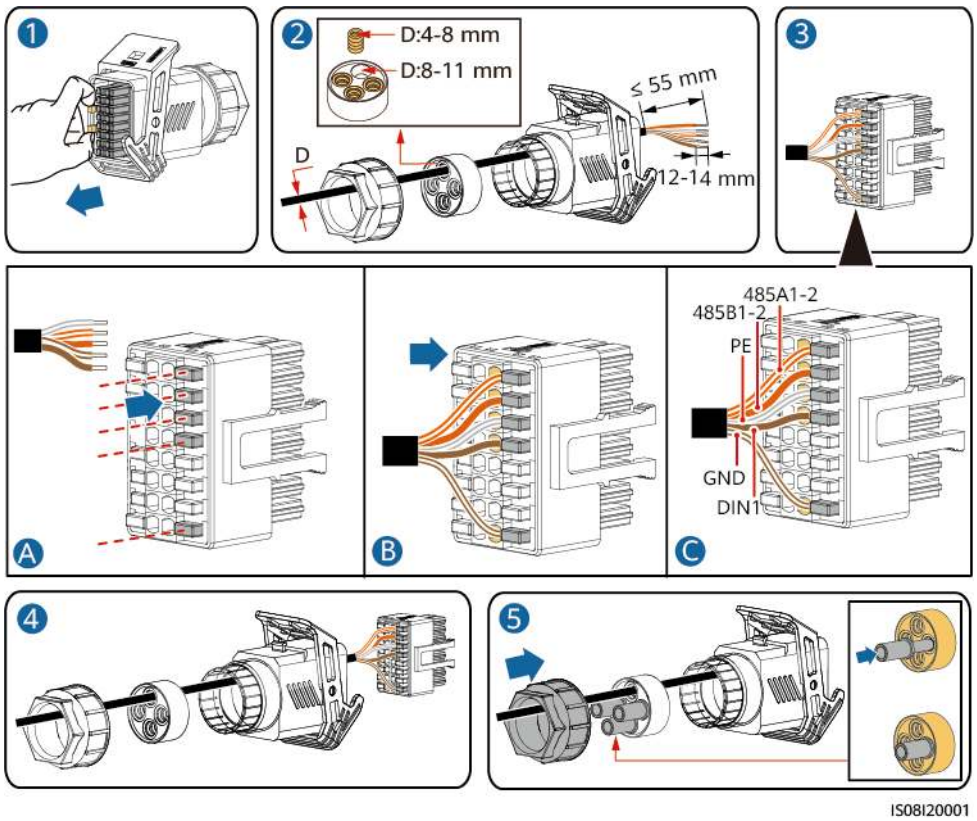

Step 2 Connect the signal cable connector to the COM port.

Figure 5-39 Securing the signal cable connector

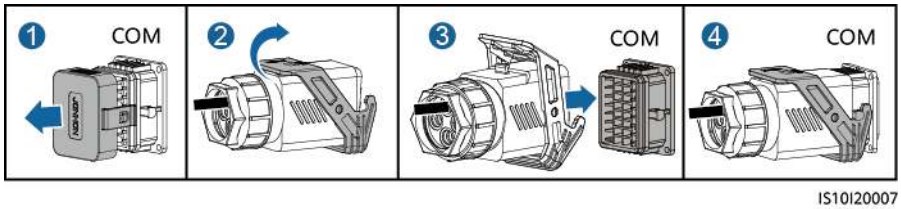

----End

5.8.7 Connecting the Grid Scheduling Signal Cable

Cable Connection

- Smart Dongle, SmartAssistant, and Smart Guard networking: The inverter is connected to the ripple control device. **Figure 5-40** shows the cable connections.
- SmartLogger networking: The SmartLogger is connected to the ripple control device. **Figure 5-41** shows the cable connections.

Figure 5-40 Cable connections (Smart Dongle, SmartAssistant, and Smart Guard networking)

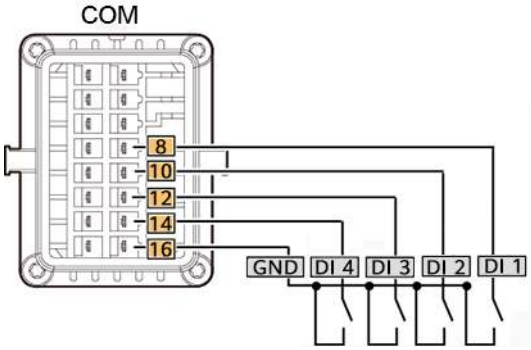

Figure 5-41 Cable connections (SmartLogger networking)

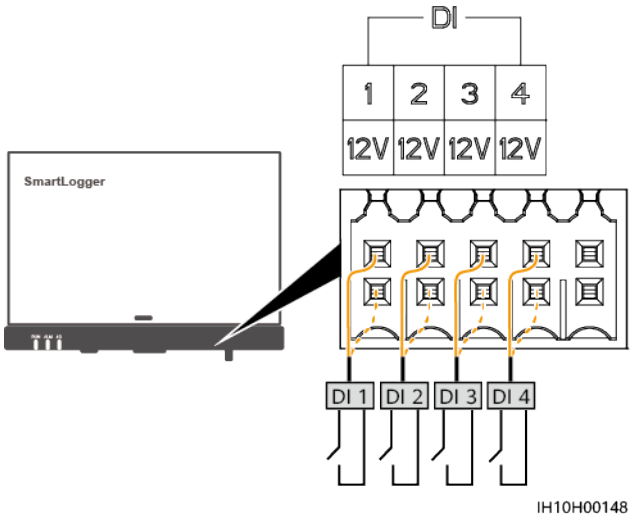

- In Smart Dongle networking, log in to the local commissioning screen as an installer, choose **Power adjustment** > **Dry contact scheduling settings**, and enable **Dry contact scheduling**.
- In SmartAssistant networking, log in to the local commissioning screen as an installer, choose **Power adjustment** > **Scheduling via DI Port**, and enable **Scheduling via DI Port**.
- In SmartLogger networking, choose **Monitoring** > **Inverter/PCS** > **Running Param.** > **Power Adjustment**. Enable **Remote power schedule** for the inverter/Smart PCS. Choose **Settings** > **Power Adjustment** > **Active Power Control**, and set **Active Power Control** to **DI active scheduling**.

Procedure

Step 1 Connect the signal cable to the signal cable connector.

Figure 5-42 Installing the cable

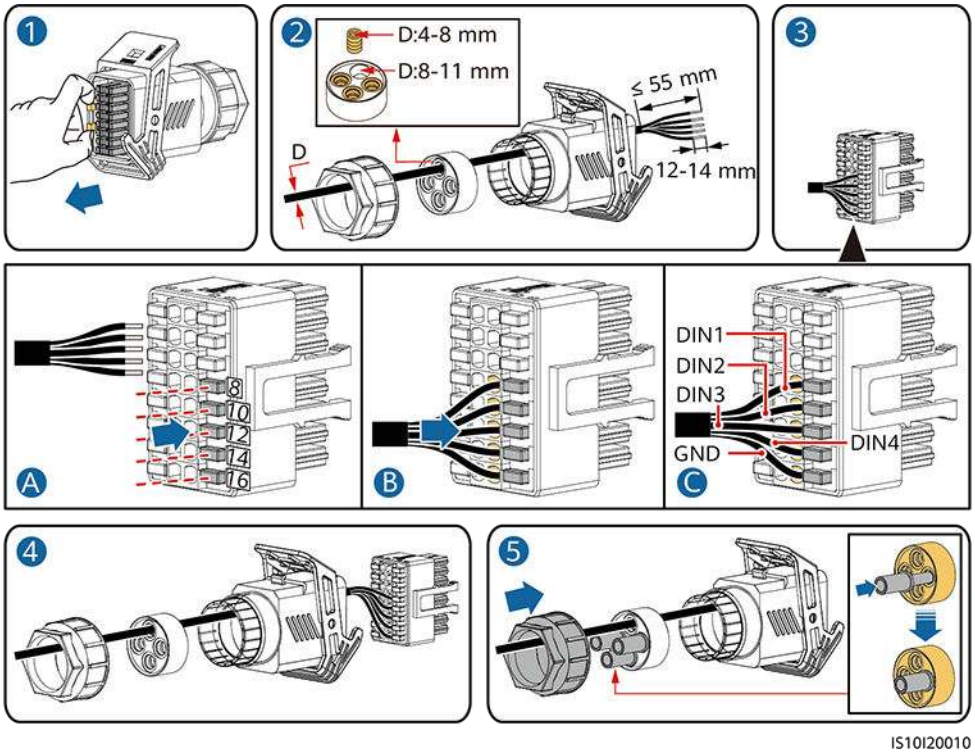

Step 2 Connect the signal cable connector to the COM port.

Figure 5-43 Securing the signal cable connector

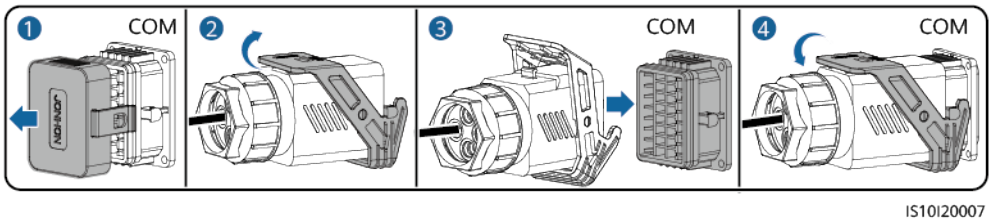

----End

5.8.8 Connecting a Signal Cable to the Smart Backup Box

Procedure

Step 1 Connect the signal cable to the signal cable connector.

Figure 5-44 Installing the cable

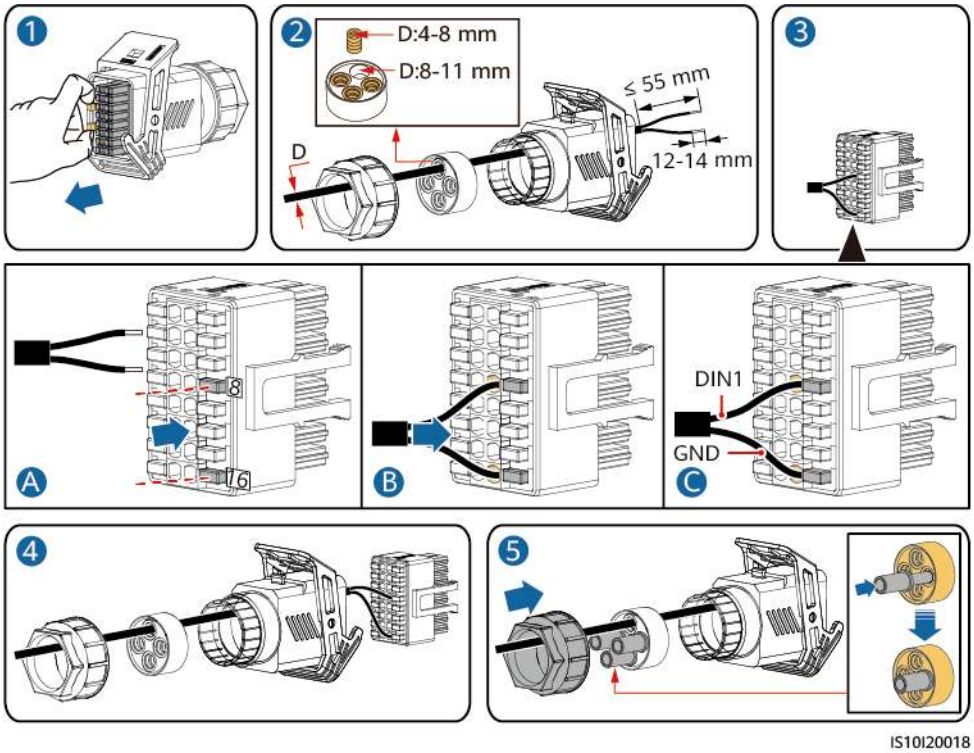

Step 2 Connect the signal cable connector to the COM port.

Figure 5-45 Securing the signal cable connector

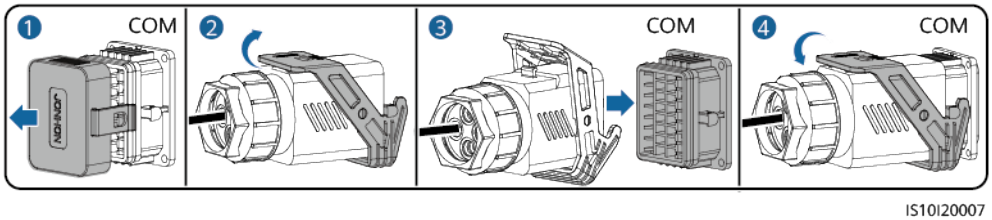

----End

5.8.9 Connecting NS Protection Signal Cables

Connecting NS Protection Signal Cables to Inverters

NOTE

- The NS protection function is applicable to grid code **VDE-AR-N-4105**, **SWITZERLAND-NA/EEA:2020-LV230**, **FINLAND-EN50549-LV230**, or **ANRE**.
- Connect the NS protection switch to GND (pin 13) and DIN5 (pin 15). The switch is turned on by default. When the switch is turned off, NS protection is triggered. Rapid shutdown and NS protection use the same pins, which are GND (pin 13) and DIN5 (pin 15). Therefore, you can use only one of the functions.
- The cable connection method for a single inverter is the same as that for cascaded inverters. For a single inverter, connect GND and DIN5 to the same cable.
- Log in to the app as an installer, choose **Me** > **Device commissioning**, and connect to the WLAN hotspot of the inverter. Log in to the local commissioning system as an installer, choose **Settings** > **Feature parameters** > **Dry contact function**, and set **Dry contact function** to **NS protection**.

Figure 5-46 Connecting cascaded inverters to the NS protection switch

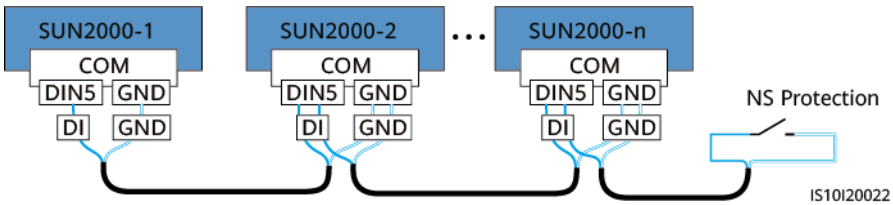

Step 1 Connect the signal cables of the cascaded inverters to the signal cable connectors.

Figure 5-47 Installing cables

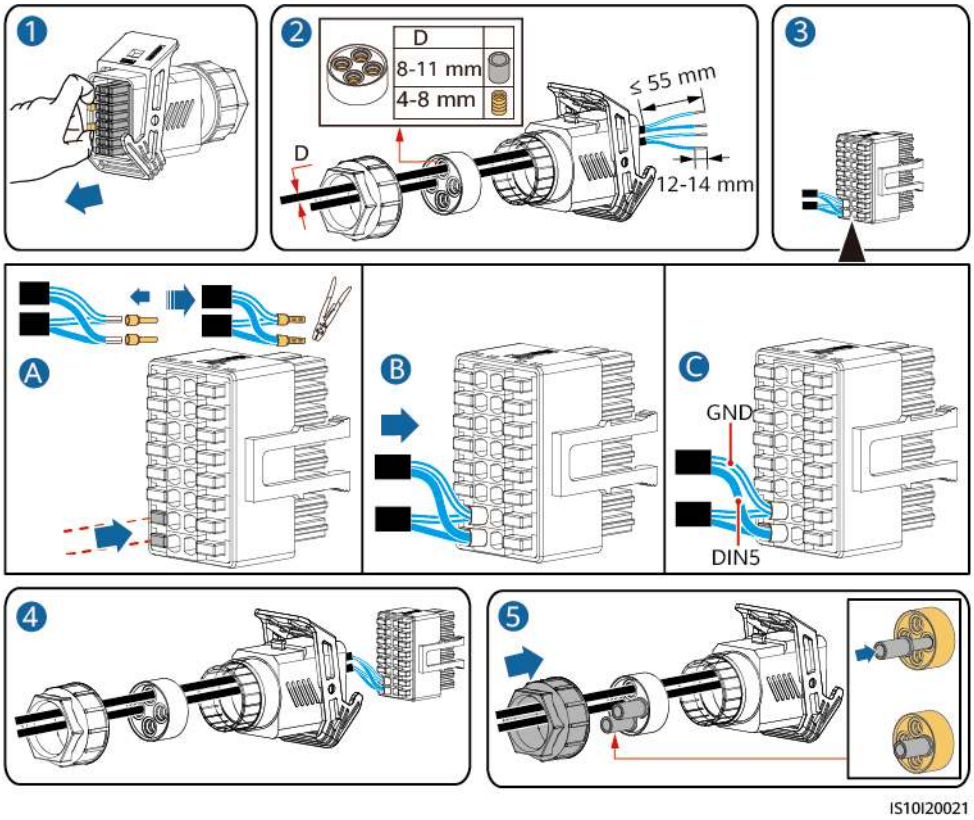

Step 2 Connect the signal cable connectors to the COM ports.

Figure 5-48 Securing the signal cable connector

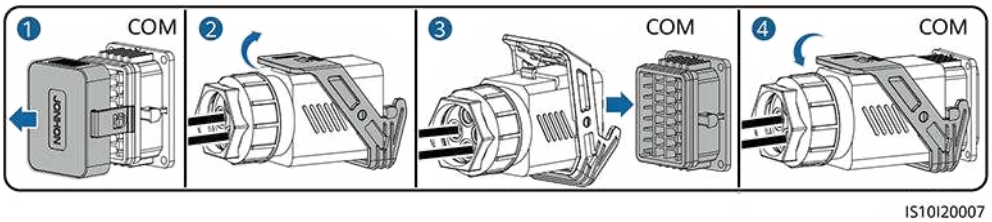

----End

Connecting NS Protection Signal Cables to the SmartLogger

NOTE

- The NS protection function is applicable to grid code **VDE-AR-N-4105**, **SWITZERLAND-NA/EEA:2020-LV230**, **FINLAND-EN50549-LV230**, or **ANRE**.
- The NS protection device is connected to the AI1 port and 12 V power output port on the SmartLogger. The SmartLogger shuts down the inverter over the voltage change detected at the AI1 port. When the NS protection device is disconnected, the AI1 port voltage is 0 V, and the inverter shuts down. When the NS protection device is connected again, the AI1 port voltage is 12 V, and you need to start the inverter manually.

Figure 5-49 Connecting the SmartLogger to the NS protection switch

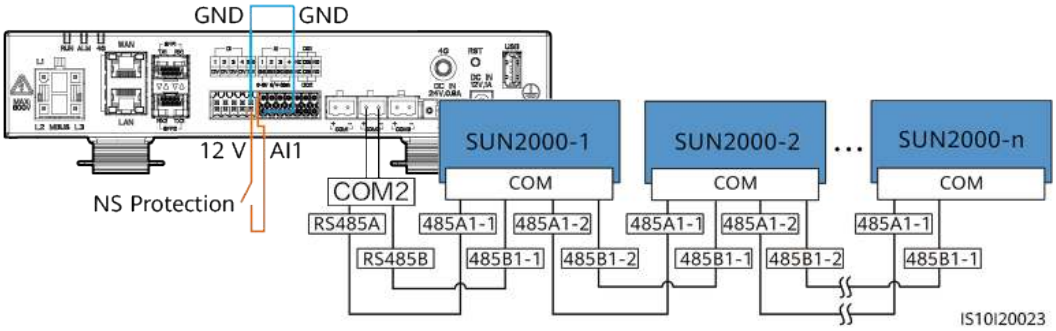

6 Commissioning

DANGER

- Wear personal protective equipment and use dedicated insulated tools to avoid electric shocks or short circuits.

6.1 Checking Before Power-On

Table 6-1 Checklist

No.	Item	Acceptance Criterion
1	SUN2000 installation	The SUN2000 is installed correctly and securely.
2	Smart Dongle	The Smart Dongle is installed correctly and securely.
3	Cable routing	The cables are routed properly as required by the customer.
4	Cable ties	Cable ties are secured evenly and no burr exists.
5	Reliable grounding	The PE cable is connected correctly and securely.
6	Switch	DC switches and all the switches connecting to the SUN2000 are OFF.
7	Cable connection	The AC output power cable, DC input power cables, battery cable, and signal cable are connected correctly and securely.
8	Unused terminals and ports	Unused terminals and ports are locked by watertight caps.

 Copyright © Huawei Digital Power Technologies Co., Ltd.

No.	Item	Acceptance Criterion
9	Installation environment	The installation space is proper, and the installation environment is clean and tidy.

6.2 SUN2000 power-on

Important Notes

NOTICE

Before the equipment is put into operation for the first time, ensure that the parameters are set correctly by professional personnel. Incorrect parameter settings may result in noncompliance with local grid connection requirements and affect the normal operations of the equipment.

NOTICE

Before turning on the AC switch between the SUN2000 and the power grid, check that the AC voltage is within the specified range using a multimeter.

Procedure

Step 1 If a battery is connected, turn on the battery switch.

Step 2 Turn on the AC switch between the SUN2000 and the power grid.

NOTICE

If the DC is on and the AC is off, the SUN2000 reports a **Grid Failure** alarm. The SUN2000 starts normally only after the fault is automatically rectified.

Step 3 (Optional) Remove the locking screw from the DC switch.

Figure 6-1 Removing the locking screw from a DC switch

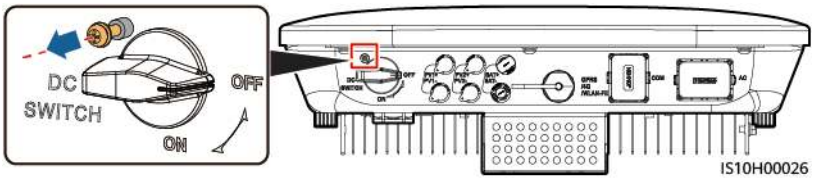

Step 4 Turn on the DC switch (if any) between the PV string and the SUN2000.

Step 5 Turn on the DC switch at the bottom of the SUN2000.

Step 6 Wait for about 1 minute and observe the LED indicators on the SUN2000 to check its running status.

Table 6-2 LED indicator description

Category	Status		Meaning
Running indication 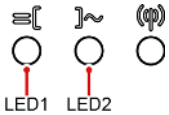	**LED1**	**LED2**	N/A
	Steady green	Steady green	The SUN2000 is operating in grid-tied mode.
	Blinking green at long intervals (on for 1s and then off for 1s)	Off	The DC is on and the AC is off.
	Blinking green at long intervals (on for 1s and then off for 1s)	Blinking green at long intervals (on for 1s and then off for 1s)	The DC is on, the AC is on, and the SUN2000 is not exporting power to the power grid.
	Off	Blinking green at long intervals (on for 1s and then off for 1s)	The DC is off and the AC is on.
	Steady orange	Steady orange	The SUN2000 is operating in the off-grid mode.
	Blinking orange slowly	Off	The DC is on, and the SUN2000 has no output in the off-grid mode.
	Blinking orange slowly	Blinking orange slowly	The SUN2000 is operating in the overload in backup mode.
	Off	Off	Both the DC and AC are off.
	Blinking red at short intervals (on for 0.2s and then off for 0.2s)	N/A	There is a DC environmental alarm, such as an alarm indicating that High String Input Voltage, String Reverse Connection, or Low Insulation Resistance.
	N/A	Blinking red at short intervals (on for 0.2s and then off for 0.2s)	There is an AC environmental alarm, such as an alarm indicating Grid Undervoltage, Grid Overvoltage, Grid Overfrequency, or Grid Underfrequency.
	Steady red	Steady red	Fault

Category	Status			Meaning
Communication indication 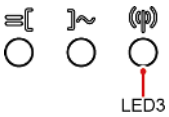	**LED3**			N/A
	Blinking green at short intervals (on for 0.2s and then off for 0.2s)			Communication is in progress. (When a mobile phone is connected to the SUN2000, the indicator first indicates that the phone is connected to the SUN2000): blinks green at long intervals.)
	Blinking green at long intervals (on for 1s and then off for 1s)			The mobile phone is connected to the SUN2000.
	Off			There is no communication.
Device replacement indication	**LED1**	**LED2**	**LED3**	N/A
	Steady red	Steady red	Steady red	The SUN2000 hardware is faulty. The SUN2000 needs to be replaced.

NOTE

If the off-grid load is overloaded, indicators LED1 and LED2 on the inverter blink orange slowly. Reduce the off-grid load power and manually clear the alarm or until the inverter is recovered. The inverter attempts to restart at an interval of 5 minutes. If the inverter fails to restart for three times, the interval changes to 2 hours. If the inverter is standby in off-grid mode, check the inverter alarms and rectify the fault.

Step 7 (Optional) Observe the LED indicator on the Smart Dongle to check its running status.

- WLAN-FE Smart Dongle

Figure 6-2 WLAN-FE Smart Dongle

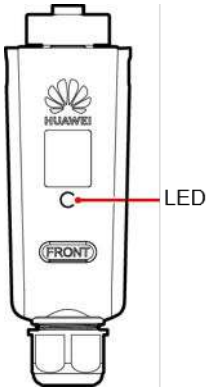

Table 6-3 Indicator description

Indicators	Status	Remarks	Description
-	Off	Normal	The Smart Dongle is not secured or not powered on.
Yellow (blinking green and red simultaneously)	Steady on		The Smart Dongle is secured and powered on.
Red	Blinking at short intervals (on for 0.2s and then off for 0.2s)		The parameters for connecting to the router are not set.
Red	Steady on	Abnormal	The Smart Dongle is faulty. Replace the Smart Dongle.
Blinking red and green alternatively	Blinking at long intervals (on for 1s and then off for 1s)	Abnormal	No communication with the SUN2000 – Remove and then insert the Smart Dongle. – Check whether the SUN2000 matches the Smart Dongle. – Connect the Smart Dongle to another SUN2000. Check whether the Smart Dongle is faulty or the USB port of the SUN2000 is faulty.
Green	Blinking at long intervals (on for 0.5s on and then off for 0.5s)	Normal	Connecting to the router.
Green	Steady on		Connected to the management system.
Green	Blinking at short intervals (on for 0.2s and then off for 0.2s)		The SUN2000 communicates with the management system through the Smart Dongle.

 Copyright © Huawei Digital Power Technologies Co., Ltd.

- 4G Smart Dongle

Table 6-4 Indicator description

Indicators	Status	Remarks	Description
-	Off	Normal	The Smart Dongle is not secured or not powered on.
Yellow (blinking green and red simultaneously)	Steady on	Normal	The Smart Dongle is secured and powered on.
Green	The blinking interval is 2s. The indicator is on for 0.1s and then off for 1.9s alternately.	Normal	Dialing (lasting for less than 1 minute)
		Abnormal	If the duration is longer than 1 minute, the 4G parameter settings are incorrect. Reset the parameters.
	Blinking at long intervals (on for 1s and then off for 1s)	Normal	The dialup is successful (lasting for less than 30s).
		Abnormal	If the duration is longer than 30s, the management system parameters are incorrectly set. Reset the parameters.
	Steady on	Normal	Connected to the management system.
	Blinking at short intervals (on for 0.2s and then off for 0.2s)		The SUN2000 communicates with the management system through the Smart Dongle.
Red	Steady on	Abnormal	The Smart Dongle is faulty. Replace the Smart Dongle.

 Copyright © Huawei Digital Power Technologies Co., Ltd.

Indicators	Status	Remarks	Description
	Blinking at short intervals (on for 0.2s and then off for 0.2s)		The Smart Dongle has no SIM card or the SIM card is in poor contact. Check whether the SIM card has been installed or is in good contact. If not, install the SIM card or remove and insert the SIM card.
	Blinking at long intervals (on for 1s and then off for 1s)		The Smart Dongle fails to be connected to a management system because the SIM card has no signals, weak signal strength, or no traffic. If the Smart Dongle is reliably connected, check the SIM card signal through the SUN2000 app. If no signal is received or the signal strength is weak, contact the carrier. Check whether the tariff and traffic of the SIM card are normal. If not, recharge the SIM card or buy traffic.

 Copyright © Huawei Digital Power Technologies Co., Ltd.

Indicators	Status	Remarks	Description
Blinking red and green alternatively	Blinking at long intervals (on for 1s and then off for 1s)		No communication with the SUN2000 – Remove and then insert the Smart Dongle. – Check whether the SUN2000 matches the Smart Dongle. – Connect the Smart Dongle to another SUN2000. Check whether the Smart Dongle is faulty or the USB port of the SUN2000 is faulty.

----End

7 Power-On and Commissioning

DANGER

- Wear personal protective equipment and use dedicated insulated tools to avoid electric shocks or short circuits.

7.1 Device Commissioning

Smart Guard Networking

No.	Contents
1	Downloading the App and Registering an Installer Account
2	Quick Settings, Running Information Viewing, and Alarm Management
3	Setting Parameters: Backup Power Parameter Settings, Power Control, and Battery Parameter Settings
4	Connecting to a Plant
5	Registering an Owner Account or Another Installer Account
6	Energy Management: Negative Rate Optimization, Energy Management Assistant, and Intelligent Power Backup

For details about the device commissioning procedure, see the *Smart Guard Networking Commissioning Manual*. The commissioning manual varies depending on the app. Refer to the manual corresponding to the app in use.

 Copyright © Huawei Digital Power Technologies Co., Ltd.

SmartAssistant Networking

No.	Contents
1	Downloading the App and Registering an Installer Account
2	Quick Settings
3	Connecting to a Plant, Setting Electricity Prices, and Registering an Account
4	Setting Parameters: Power Control, Battery Parameter Settings, Communication Parameter Settings, and Other Parameter Settings
5	Energy Management: Negative Rate Optimization and Energy Management Assistant
6	Commissioning Smart Appliances and Huawei Chargers

For details about the device commissioning procedure, see the *SmartAssistant Networking Commissioning Manual*. The commissioning manual varies depending on the app. Refer to the manual corresponding to the app in use.

Smart Dongle Networking

No.	Contents
1	Downloading the App and Registering an Installer Account
2	Quick Settings
3	Connecting to a Plant and Registering an Account
4	Setting Parameters: Power Control, Battery Parameter Settings, and Other Parameter Settings
5	Energy Management: Negative Rate Optimization and Energy Management Assistant

For details about the device commissioning procedure, see the Smart Dongle Networking and Inverter Direct Connection Commissioning Manual. The commissioning manual varies depending on the app. Refer to the manual corresponding to the app in use.

7.2 SmartLogger Networking Scenario

See the ***SmartLogger3000 User Manual***.

7.2.1 DRM (Australia AS4777)

Function

According to Australia standards, inverters need to support the function of demand response modes (DRM), and DRM0 is a mandatory requirement.

This function is disabled by default.

Figure 7-1 Wiring diagram for the DRM function

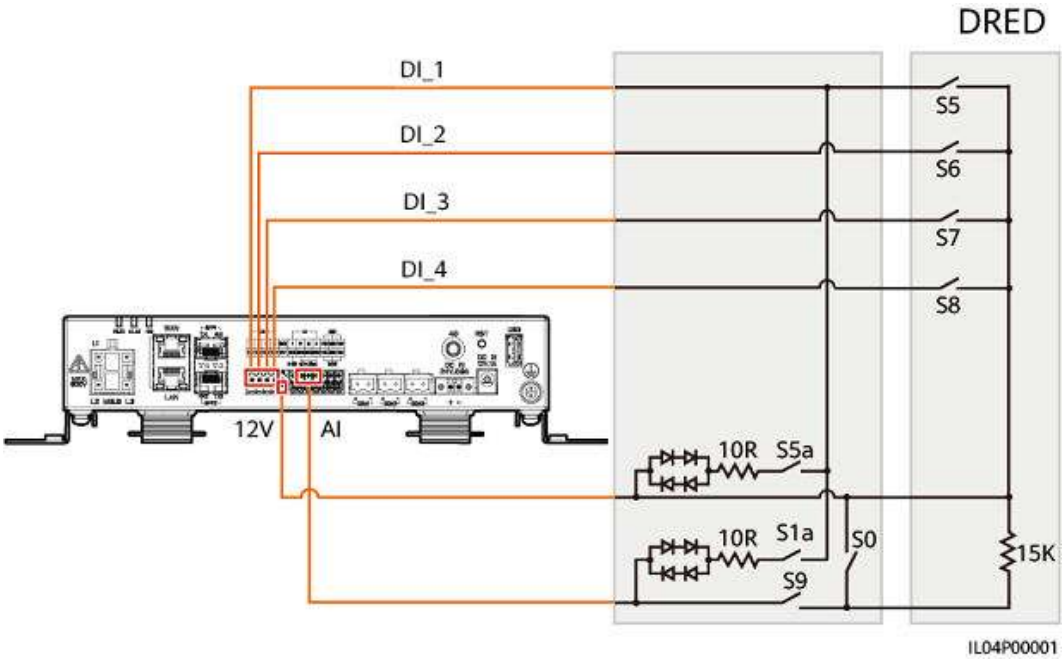

NOTE

- The Demand Response Enabling Device (DRED) is a power grid dispatching device.
- Inverters need to connect to the SmartLogger to implement the DRM function.
- When the master inverter connects to the DRED through SmartLogger, log in to the SmartLogger WebUI and choose **Settings > DRM** and set DRM parameters. Alternatively, scan the QR code on the SmartLogger, log in to the app, choose **Power Adjustment** > **DRM** on the home screen, and set **DRM0 Access Port**.

Table 7-1 DRM requirements

Mode	SmartLogger Port	Requirement
DRM0	AI2–AI4	• When S0 is turned on, the inverters shut down. • When S0 is turned off, the inverters are connected to the power grid.

Setting DRM on the management system

Step 1 Log in to the management system and select a PV plant on the home page.

Step 2 Choose **Device**, select the SmartLogger connected to the inverters, choose **Parameter settings > DRM**, and set **DRM0 Access Port**.

----End

8 System Maintenance

Prerequisites

DANGER

- Wear personal protective equipment and use dedicated insulated tools to avoid electric shocks or short circuits.

WARNING

- Before performing maintenance, power off the equipment, follow the instructions on the delayed discharge label, and wait for a period of time as specified to ensure that the equipment is not energized.

8.1 SUN2000 Power-Off

Important Notes

WARNING

- After the system is powered off, the inverter is still energized and hot, which may cause electric shocks or burns. Therefore, wait for 5 minutes after power-off and then put on insulated gloves to operate the inverter.
- Before maintaining the optimizer and PV string, turn off the AC switch and DC switch. Otherwise, electric shocks may occur as the PV string is energized.

Procedure

Step 1 Turn off the AC switch between the SUN2000 and the power grid.

Step 2 Turn off the DC switch at the bottom of the SUN2000.

 Copyright © Huawei Digital Power Technologies Co., Ltd.

Step 3 (Optional) Install the locking screw beside the DC switch.

Figure 8-1 Installing the locking screw for the DC switch

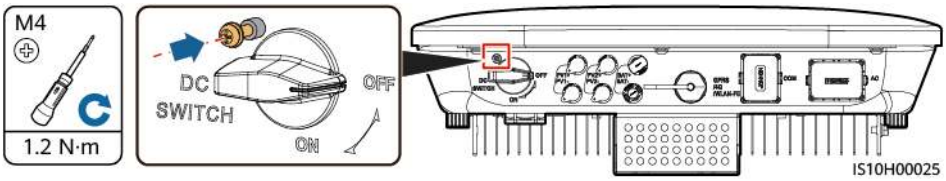

Step 4 If there is a DC switch between the inverter and PV string, turn off the DC switch.

Step 5 (Optional) Turn off the battery switch between the SUN2000 and batteries.

----End

8.2 Routine Maintenance

To ensure that the SUN2000 can operate properly for a long term, you are advised to perform routine maintenance on it as described in this chapter.

CAUTION

Before cleaning the system, connecting cables, and maintaining the grounding reliability, power off the system.

Table 8-1 Maintenance list

Check Detail	Check Method	Maintenance Interval
System cleanliness	Check the heat sink for foreign matter or the overall health of the SUN2000.	Annual or every time an abnormality is detected
System running status	Check the SUN2000 for damage or deformation.	Annual
Electrical connections	• Cables are securely connected. • Cables are intact, in particular, the parts touching the metallic surface are not scratched.	The first inspection is 6 months after the initial commissioning. From then on, the interval can be 6 to 12 months.
Grounding reliability	Check whether the ground terminal and ground cable are securely connected.	Annual
Sealing	Check whether all terminals and ports are properly sealed.	Annual

8.3 Troubleshooting

For details about alarms, see the **Inverter Alarm Reference**.

9 Handling the Inverter

9.1 Removing the SUN2000

NOTICE

Before removing the SUN2000, power off the AC and DC (batteries).

Perform the following operations to remove the SUN2000:

1. Disconnect all cables from the SUN2000, including RS485 communications cables, DC input power cables, AC output power cables, and PGND cables.
2. Remove the SUN2000 from the mounting bracket.
3. Remove the mounting bracket.

9.2 Packing the SUN2000

- If the original packing materials are available, put the SUN2000 inside them and then seal them by using adhesive tape.
- If the original packing materials are not available, put the SUN2000 inside a suitable cardboard box and seal it properly.

9.3 Disposing of the SUN2000

If the SUN2000 service life expires, dispose of it according to the local disposal rules for electrical equipment waste.

 Copyright © Huawei Digital Power Technologies Co., Ltd.

10 Technical Specifications

10.1 SUN2000 Technical Specifications

Efficiency

Technical Specifications	SUN2000-3KTL-M1	SUN2000-4KTL-M1	SUN2000-5KTL-M1	SUN2000-6KTL-M1	SUN2000-8KTL-M1	SUN2000-10KTL-M1	SUN2000-10KTL-BEM1
Maximum efficiency	98.2%	98.3%	98.4%	98.6%	98.6%	98.6%	98.6%
European efficiency	96.7%	97.1%	97.5%	97.7%	98.0%	98.1%	98.1%

Input

Technical Specifications	SUN2000-3KTL-M1	SUN2000-4KTL-M1	SUN2000-5KTL-M1	SUN2000-6KTL-M1	SUN2000-8KTL-M1	SUN2000-10KTL-M1	SUN2000-10KTL-BEM1
Maximum input voltage[a]	1100 V						
Maximum input current (per MPPT)	11 A/13.5 A (Subject to the product nameplate)						
Maximum short-circuit current (per MPPT)	15 A/19.5 A (Subject to the product nameplate)						

Technical Specifications	SUN2000-3KTL-M1	SUN2000-4KTL-M1	SUN2000-5KTL-M1	SUN2000-6KTL-M1	SUN2000-8KTL-M1	SUN2000-10KTL-M1	SUN2000-10KTL-BEM1
Minimum startup voltage	200 V						
MPPT voltage range[c]	140–980 V						
Rated input voltage	600 V						
Maximum number of inputs	2						
Number of MPPTs[b]	2						
Battery normal voltage	600 Vdc						
Battery voltage range	600-1100 Vdc						
Battery maximum current	16.7 A						
Battery type	Li-ion						
Note a: The maximum input voltage is the maximum DC input voltage that the SUN2000 can withstand. If the input voltage exceeds this value, the SUN2000 may be damaged. Note b: The maximum input power of an MPPT circuit is 8.8 kW. If the input power exceeds this value, the inverter may limit the output power of PV modules. Note c: If the input voltage is beyond the MPPT voltage range, the inverter cannot work properly.							

Output (On Grid)

Technical Specifications	SUN2000-3KTL-M1	SUN2000-4KTL-M1	SUN2000-5KTL-M1	SUN2000-6KTL-M1	SUN2000-8KTL-M1	SUN2000-10KTL-M1	SUN2000-10KTL-BEM1
Rated output power	3000 W	4000 W	5000 W	6000 W	8000 W	10,000 W	10,000 W
Maximum apparent power	3300 VA	4400 VA	5500 VA	6600 VA	8800 VA	11,000 VA	10,000 VA

 Copyright © Huawei Digital Power Technologies Co., Ltd.

Technical Specifications	SUN2000-3KTL-M1	SUN2000-4KTL-M1	SUN2000-5KTL-M1	SUN2000-6KTL-M1	SUN2000-8KTL-M1	SUN2000-10KTL-M1	SUN2000-10KTL-BEM1
Maximum active power (cosϕ = 1)	3300 W	4400 W	5500 W	6600 W	8800 W	11,000 W	10,000 W
Rated output voltage	220 V/380 V, 230 V/400 V, 3W+N+PE						
Maximum output voltage at long-term operation	See standards about the local power grid.						
Rated output current	4.6 A (380 V)/ 4.4 A (400 V)	6.1 A (380 V) /5.8 A (400 V)	7.6 A (380 V)/ 7.3 A (400 V)	9.1 A (380 V)/ 8.7 A (400 V)	12.2 A (380 V) /11.6 A (400 V)	15.2 A (380 V)/ 14.5 A (400 V)	15.2 A (380 V)/ 14.5 A (400 V)
Maximum output current	5.1 A	6.8 A	8.5 A	10.1 A	13.5 A	16.9 A	16.9 A
Rated apparent power	3 kVA	4 kVA	5 kVA	6 kVA	8 kVA	10 kVA	10 kVA
Inrush current	5.1 A	6.8 A	8.5 A	10.1 A	13.5 A	16.9 A	16.9 A
Max output fault current	15.06 A	20.08 A	25.1 A	30.12 A	40.16 A	50.2 A	50.2 A
Max output overcurrent protection	31.8 A	31.8 A	31.8 A	31.8 A	31.8 A	31.8 A	31.8 A
Output voltage frequency	50 Hz/60 Hz						
Power factor	0.8 leading–0.8 lagging						
Maximum total harmonic distortion (THD) AC THDi	< 3% under rated conditions. Single harmonic meets the VDE4105 requirements.						

Output (Off Grid)

Technical Specifications	SUN2000-3KTL-M1	SUN2000-4KTL-M1	SUN2000-5KTL-M1	SUN2000-6KTL-M1	SUN2000-8KTL-M1	SUN2000-10KTL-M1	SUN2000-10KTL-BEM1
Rated apparent power	3000 VA	3300 VA					
Maximum apparent power	3300 VA	3630 VA					

Protection

Technical Specifications	SUN2000-3KTL-M1	SUN2000-4KTL-M1	SUN2000-5KTL-M1	SUN2000-6KTL-M1	SUN2000-8KTL-M1	SUN2000-10KTL-M1	SUN2000-10KTL-BEM1
Overvoltage category	PV II/AC III						
Input DC switch	Supported						
Islanding protection	Supported						
Output overcurrent protection	Supported						
Input reverse connection protection	Supported						
PV string fault detection	Supported						
DC surge protection	DC common mode: 10 kA						
AC surge protection	Common mode: 5 kA; differential mode: 5 kA						
Insulation resistance detection	Supported						
Residual current monitoring (RCMU)	Supported						

 Copyright © Huawei Digital Power Technologies Co., Ltd.

Technical Specifications	SUN2000-3KTL-M1	SUN2000-4KTL-M1	SUN2000-5KTL-M1	SUN2000-6KTL-M1	SUN2000-8KTL-M1	SUN2000-10KTL-M1	SUN2000-10KTL-BEM1
AFCI	Supported						
PV module safe shutdown, optimizer	Supported						
PID repair	Supported						
Active anti-islanding method	AFD						
Protection class	I						
PV and AC port	DVCC						
Communication port	DVCA						

Display and Communication

Technical Specifications	SUN2000-3KTL-M1	SUN2000-4KTL-M1	SUN2000-5KTL-M1	SUN2000-6KTL-M1	SUN2000-8KTL-M1	SUN2000-10KTL-M1	SUN2000-10KTL-BEM1
Display	LED and WLAN+app						
RS485	Supported						
External expansion communication module	Supports WLAN and 4G.						
remote ripple control	Supported						

General Specifications

Technical Specifications	SUN2000-3KTL-M1	SUN2000-4KTL-M1	SUN2000-5KTL-M1	SUN2000-6KTL-M1	SUN2000-8KTL-M1	SUN2000-10KTL-M1	SUN2000-10KTL-BEM1
Dimensions (W x H x D)	525 mm x 492.5 mm x 166 mm (including the mounting bracket)						
Weight	17 kg (including only the rear mounting kit of the SUN2000)						
Noise	29 dB (A) (typical working condition)						
Operating temperature	–25°C to +60°C (derated when the temperature is higher than 45°C)						
Operating humidity	0–100% RH						
Cooling mode	Natural convection						
Maximum operating altitude	4000 m (derated when the altitude is greater than 3000 m)						
Storage temperature	–40°C to +70°C						
Storage humidity	5–95% RH (non-condensing)						
Input terminal	Staubli MC4						
Output terminal	Waterproof quick-connect terminal						
IP rating	IP65						
Topology	Non-Isolation						
Environmental protection requirements	RoHS 6						

 Copyright © Huawei Digital Power Technologies Co., Ltd.

Wireless Communication Parameters

Specifications	Inverter Built-in WiFi	WLAN-FE Smart Dongle	4G Smart Dongle
Frequency	2400–2483.5 MHz	SDongleA-05: 2400–2483.5 MHz	SDongleA-03-EU: ● Supports LTE-FDD: B1/B3/B7/B8/B20. ● Supports LTE-TDD: B38/B40. ● Supports WCDMA/HSDPA/HSUPA/HSPA+: B1/B8. ● Supports GSM/GPRS/EDGE: 900 MHz/1800 MHz. SDongleB-06-EU (WiFi): 2400–2483.5 MHz SDongleB-06-EU (4G): ● Supports LTE-FDD: B1/B3/B5/B8. ● Supports LTE-TDD: B7/B20/B28/B38/B40/B41. ● Supports GSM/GPRS/EDGE: 900 MHz/1800 MHz.
Protocol standard	WLAN 802.11b/g/n	SDongleA-05: WLAN 802.11b/g/n	SDongleA-03-EU: ● Supports LTE-FDD (with receive diversity): B1/B3/B7/B8/B20/B28. ● Supports LTE-FDD (with receive diversity): B38/B40/B41. ● Supports WCDMA: B1/B8. ● Supports GSM: 900 MHz/1800 MHz. ● Supports digital audio. SDongleB-06-EU (WiFi): WLAN 802.11b/g/n SDongleB-06-EU (4G): ● Supports LTE FDD (with receive diversity): B1/B3/B5/B8. ● Supports LTE-TDD (with receive diversity): B7/B20/B28/B38/B40/B41. ● Supports GSM: 900 MHz/1800 MHz. ● Supports digital audio.

 Copyright © Huawei Digital Power Technologies Co., Ltd.

Specifications	Inverter Built-in WiFi	WLAN-FE Smart Dongle	4G Smart Dongle
Bandwidth	20 MHz/40 MHz (optional)	20 MHz/40 MHz (optional)	LTE features: ● Supports a maximum of 3GPP R8 non-CA Cat 4 FDD and TDD. ● Supports 1.4 MHz/3 MHz/5 MHz/10 MHz/15 MHz/20 MHz RF bandwidth. ● Supports MIMO in the downlink. ● LTE-FDD: maximum downlink rate of 150 Mbit/s and maximum uplink rate of 50 Mbit/s ● LTE-TDD: maximum downlink rate of 130 Mbit/s and maximum uplink rate of 30 Mbit/s UMTS features: ● Supports 3GPP R7 HSDPA+, HSDPA, HSUPA, and WCDMA. ● Supports QPSK and 16QAM modulation. ● HSDPA+: maximum downlink rate of 21 Mbit/s ● HSUPA: maximum uplink rate of 5.76 Mbit/s ● WCDMA: maximum downlink rate of 384 kbit/s and maximum uplink rate of 384 kbit/s GSM features: GPRS: ● Supports GPRS multislot class 12. ● Coding schemes: CS-1, CS-2, CS-3, and CS-4 ● Maximum downlink rate: 85.6 kbit/s; maximum uplink rate: 85.6 kbit/s EDGE: ● Supports EDGE multislot class 12. ● Supports GMSK and 8-PSK modulation and coding schemes. ● Downlink coding format: MCS 1–9 ● Uplink coding format: MCS 1–9 ● Maximum downlink rate: 236.8 kbit/s; maximum uplink rate: 236.8 kbit/s SDongleB-06-EU (WiFi): 20 MHz/40 MHz (optional)

Specifications	Inverter Built-in WiFi	WLAN-FE Smart Dongle	4G Smart Dongle
Maximum transmit power	≤ 20 dBm EIRP	≤ 20 dBm EIRP	• Class 4 (33 dBm±2 dB), EGSM900 frequency band • Class 1 (30 dBm±2 dB), DCS1800 frequency band • Class E2 (27 dBm±3 dB), EGSM900 8-PSK • Class E2 (26 dBm±3 dB), DCS1800 8-PSK • Class 3 (24 dBm+1/–3 dB), WCDMA frequency band • Class 3 (23 dBm±2 dB), LTE-FDD frequency band • Class 3 (23 dBm±2 dB), LTE-TDD frequency band SDongleB-06-EU (WiFi): ≤ 20 dBm EIRP

NOTE

The SDongleA-03 will no longer be placed on the market.

10.2 Optimizer Technical Specifications

Efficiency

Technical Specifications	SUN2000-450W-P
Maximum efficiency	99.5%
European weighted efficiency	99.0%

Input

Technical Specifications	SUN2000-450W-P
Rated PV module power	450 W
Maximum PV module power	472.5 W

 Copyright © Huawei Digital Power Technologies Co., Ltd.

Technical Specifications	SUN2000-450W-P
Maximum input voltage	80 V
MPPT voltage range	8–80 V
Maximum short-circuit current	13 A
Overvoltage level	II

Output

Technical Specifications	SUN2000-450W-P
Rated output power	450 W
Output voltage	4–80 V
Maximum output current	15 A
Output bypass	Yes
Shutdown output voltage/impedance	0 V/1 kΩ (±10%)

Common Parameters

Technical Specifications	SUN2000-450W-P
Dimensions (W x H x D)	71 mm x 138 mm x 25 mm
Net weight	≤ 550 g
DC input and output terminals	Staubli MC4
Operating temperature	–40°C to +85°C
Storage temperature	–40°C to +70°C
Operating humidity	0–100% RH

 Copyright © Huawei Digital Power Technologies Co., Ltd.

Technical Specifications	SUN2000-450W-P
Maximum operating altitude	4000 m
IP rating	IP68
Installation mode	• PV module support installation • PV module frame installation

Long String Design (Full Optimizer Configuration)

Technical Specifications	SUN2000-3KTL-M1	SUN2000-4KTL-M1	SUN2000-5KTL-M1	SUN2000-6KTL-M1	SUN2000-8KTL-M1	SUN2000-10KTL-M1	SUN2000-10KTL-BEM1
Minimum optimizer number per string	6						
Maximum optimizer number per string	35						
Maximum DC power per string	10,000 W						

 Copyright © Huawei Digital Power Technologies Co., Ltd.

A Grid Code

NOTE

- The grid codes are subject to change. The listed codes are for reference only.
- The SUN2000-10KTL-BEM1 supports only the Belgium grid code.

Table A-1 Grid Code

No.	Grid Code	Remarks
1	VDE-AR-N-4105	Germany low-voltage (LV) power grid
2	UTE C 15-712-1(A)	France mainland power grid
3	UTE C 15-712-1(B)	France island power grid
4	UTE C 15-712-1(C)	France island power grid
5	EN50438-CZ	Czech power grid
6	RD1699/661	Spain LV power grid
7	EN50438-NL	Netherlands power grid
8	C10/11	Belgium power grid
9	IEC61727	IEC 61727 LV grid-tied power grid (50 Hz)
10	Custom (50 Hz)	Reserved
11	Custom (60 Hz)	Reserved
12	TAI-PEA	Thailand grid-tied standard power grid
13	TAI-MEA	Thailand grid-tied standard power grid
14	EN50438-TR	Turkey LV power grid code

 Copyright © Huawei Digital Power Technologies Co., Ltd.

No.	Grid Code	Remarks
15	IEC61727-60Hz	IEC61727 low-voltage power grid (60 Hz)
16	EN50438_IE	Ireland LV power grid
17	PO12.3	Spain LV power grid
18	EN50549-LV	Ireland power grid
19	ABNT NBR 16149	Brazil power grid
20	DUBAI	Dubai LV power grid
21	TAIPOWER	Taiwan Power LV power grid
22	EN50438-SE	Sweden LV power grid
23	Austria	Austria power grid
24	G98	UK G98 power grid
25	G99-TYPEA-LV	UK G99_TypeA_LV power grid
26	SINGAPORE	Singapore LV power grid
27	HONGKONG	Hong Kong LV power grid
28	EN50549-SE	Sweden LV power grid
29	AUSTRALIA-AS4777_A-LV230	Australia power grid
30	AUSTRALIA-AS4777_B-LV230	Australia power grid
31	AUSTRALIA-AS4777_C-LV230	Australia power grid
32	AUSTRALIA-AS4777_NZ-LV230	Australia power grid
33	EN50549-PL	Poland
34	CEI0-21	Italy LV power grid
35	SWITZERLAND-NA/EEA:2020-LV230	Switzerland
36	DENMARK-EN50549-DK1-LV230	Denmark power grid
37	DENMARK-EN50549-DK2-LV230	Denmark power grid
38	Pakistan	Pakistan
39	OMAN	Oman low-voltage power grid
40	CZECH-EN50549-LV230	Czech power grid
41	FINLAND-EN50549-LV230	Finland power grid
42	ANRE	Romania low-voltage power grid
43	Israel	Israel power grid

 Copyright © Huawei Digital Power Technologies Co., Ltd.

No.	Grid Code	Remarks
44	Philippines	Philippines low-voltage power grid
45	NEW CALEDONIA-LV230	New Caledonia power grid
46	FRANCE-EN50549-230	France FD C11-519-11
47	NTS	Spain power grid
48	NC2022	New Caledonia power grid

 Copyright © Huawei Digital Power Technologies Co., Ltd.

B Resetting Password

Step 1 Check that the AC and DC sides of the inverter are both powered on, and indicators and are steady green or blinking slowly for more than 3 minutes.

Step 2 Complete the following operations within 4 minutes:

Turn off the AC switch and set **DC SWITCH** to **OFF** at the bottom of the inverter. If the inverter is connected to a battery, turn off the battery switch. Wait until all LED indicators on the inverter panel turn off.

Turn on the AC switch and set **DC SWITCH** to **ON**. Wait about 90s and check that indicator is blinking green slowly.

Turn off the AC switch and set **DC SWITCH** to **OFF**. Wait until all LED indicators on the inverter panel turn off.

Turn on the AC switch and set **DC SWITCH** to **ON**. Wait until all LED indicators on the inverter panel blink and then turn off after 30s.

Step 3 Reset the password within 10 minutes. (If no operation is performed within 10 minutes, all parameters of the inverter remain unchanged.)

1. Wait until indicator blinks green slowly.
2. Connect to the app using the initial WLAN hotspot name (SSID) and initial password (PSW), which can be obtained from the label on the side of the inverter.
3. On the login screen, set a new password and log in to the app.

Step 4 Set router and management system parameters to implement remote management.

----End

 Copyright © Huawei Digital Power Technologies Co., Ltd.

C Rapid Shutdown

NOTE

The rapid shutdown function is supported only if optimizers are configured for all PV modules.

If optimizers are configured for all PV modules connected to the inverter, the PV system can perform a rapid shutdown to decrease the output voltage to below 30 V within 30s.

Perform the following step to trigger a rapid shutdown:

- Method 1: To enable the rapid shutdown function, you need to connect a switch to pins 13 and 15 of the inverter communications terminal. The switch is turned on by default. When the switch is turned off, a rapid shutdown is triggered.
- Method 2: Turn off the AC switch between the inverter and the power grid. (If the inverter supports the off-grid function, choose **Settings > Feature parameters** on the home screen and enable **Off-grid mode**. Then, turning off the AC switch will not trigger a rapid shutdown.)
- Method 3: Set the **DC SWITCH** at the bottom of the inverter to **OFF**. (Turning off the switch connected to the DC side of the inverter will not trigger a rapid shutdown, and the PV strings may be energized.)
- Method 4: If **AFCI** is enabled, the inverter automatically performs arc fault detection and triggers a rapid shutdown when AFCI lock protection is implemented.

 Copyright © Huawei Digital Power Technologies Co., Ltd.

D Acronyms and Abbreviations

L	
LED	light emitting diode
M	
MPP	maximum power point
MPPT	maximum power point tracking
P	
PV	photovoltaic

 Copyright © Huawei Digital Power Technologies Co., Ltd.