GOODWE

# User Manual

## Rechargeable Li-ion Battery System

Lynx Home F Series G2

V1.8 -2026 -10-08

**Trademarks**

GOODWE and other GoodWe trademarks are trademarks of GoodWe Technologies Co.,Ltd. All other trademarks or registered trademarks mentioned in this manual are owned by the company.

**NOTICE**

The information in this user manual is subject to change due to product updates or other reasons. This guide cannot replace the product labels or the safety precautions in the user manual unless otherwise specified. All descriptions in the manual are for guidance only.

# CONTENT

**1 About This Manual ..... 01**
1.1 Applicable Model ..... 01
1.2 Target Audience ..... 01
1.3 Symbol Definition ..... 01
**2 Safety Precaution ..... 01**
2.1 General Safety ..... 01
2.2 Battery Safety ..... 02
2.3 Emergency Measures ..... 04
2.4 EU Declaration of Conformity ..... 04
**3 Product Introduction ..... 05**
3.1 Product Overview ..... 05
3.2 Application Scenarios ..... 08
3.3 Appearance ..... 09
**4 Check and Storage ..... 11**
4.1 Check Before Receiving ..... 11
4.2 Deliverables ..... 11
4.3 Storage ..... 12
**5 System Installation ..... 14**
5.1 Installation Requirements ..... 14
5.2 Installing the Battery System ..... 16
5.2.1 Moving the Equipment ..... 16
5.2.2 Installing the Battery System ..... 16
**6 Electrical Connection ..... 19**
6.1 Safety Precaution ..... 19
6.2 Electrical Connection ..... 20
6.3 Connecting the PE cable ..... 21
6.4 Connecting the Power Cable ..... 22
6.5 Connecting the Communication Cable ..... 23
6.6 (Optional) Installing the Protective Cover ..... 25
**7 System Operation ..... 26**
7.1 Check Before Power ON ..... 26
7.2 Power On ..... 26
7.3 Setting the Battery Parameters ..... 27
7.4 Indicator Status ..... 29

**8 Maintenance ..... 30**
8.1 Power OFF the Battery System ..... 30
8.2 Routine Maintenance ..... 31
8.3 Common Problem Handling ..... 31
8.4 System Troubleshooting ..... 32
**9 Technical Parameters ..... 35**

# 1 About This Manual

This manual describes the product information, installation, electrical connection, commissioning, troubleshooting, and maintenance. Read through this manual before installing and operating the product. All the installers and users have to be familiar with the product features, functions, and safety precautions. This manual is subject to update without notice. For more product details and latest documents, visit https://en.goodwe.com.

## 1.1 Applicable Model

This manual applies to the listed model below:

- LX F6.4-H-20
- LX F9.6- H-20
- LX F12.8- H-20
- LX F16.0- H-20
- LX F19.2- H-20
- LX F22.4- H-20
- LX F25.6- H-20
- LX F28.8- H-20

## 1.2 Target Audience

This manual applies to trained and knowledgeable technical professionals only. The technical personnel has to be familiar with the product, local standards, and electric systems.

## 1.3 Symbol Definition

Different levels of warning messages in this manual are defined as follows:

| |
|---|
| **DANGER** |
| Indicates a high-level hazard that, if not avoided, will result in death or serious injury. |
| **WARNING** |
| Indicates a medium-level hazard that, if not avoided, could result in death or serious injury. |
| **CAUTION** |
| Indicates a low-level hazard that, if not avoided, could result in minor or moderate injury. |
| **NOTICE** |
| Highlights key information and supplements the texts. Or some skills and methods to solve product-related problems to save time. |

# 2 Safety Precaution

Please strictly follow these safety instructions in the user manual during the operation.

| NOTICE |
| --- |
| The System is designed and tested to strictly comply with related safety rules. Read and follow all the safety instructions and cautions before any operations. Improper operation might cause personal injury or property damage as the System are electrical equipment. |

## 2.1 General Safety

| NOTICE |
| --- |
| • The information in this user manual is subject to change due to product updates or other reasons. This guide cannot replace the product labels or the safety precautions in the user manual unless otherwise specified. All descriptions in the manual are for guidance only.<br>• Before installations, read through the user manual to learn about the product and the precautions.<br>• All operations should be performed by trained and knowledgeable technicians who are familiar with local standards and safety regulations.<br>• Use insulating tools and wear personal protective equipment when operating the equipment to ensure personal safety. Wear anti-static gloves, cloths, and wrist strips when touching electronic devices to protect the inverter from damage.<br>• Strictly follow the installation, operation, and configuration instructions in this guide and user manual. The manufacturer shall not be liable for equipment damage personal injury if you do not follow the instructions. For more warranty details, please visit https://en.goodwe.com/warranty. |

## 2.2 Battery Safety

**DANGER**

- High voltage exists during the battery system running. Ensure that the equipment has been powered off to avoid the risk of electric shock before operating the device in the system. Strictly follow all safety precautions outlined in this manual and safety labels on the equipment during the operation.
- The battery used with the inverter shall be approved by the inverter manufacturer. The approved battery list can be obtained through the official website.
- Do not disassemble, modify, or replace any part of the battery without official authorization from the manufacturer. Otherwise, it may cause electrical shock or damages to the equipment for which the manufacturer shall not be held responsible.
- Do not hit, pull, drag, squeeze or step on the System or put the battery into fire. Otherwise, the battery may explode.
- Do not place the battery in a high temperature environment. Make sure that there is no direct sunlight and no heat source near the battery. When the ambient temperature exceeds 60 ℃, it may cause fire.
- Do not use the battery module or power control unit if it is defective, broken, or damaged. Damaged battery modules may leak electrolyte.
- To protect the battery pack and its components from damage during transportation, please ensure that the transportation personnel are professionally trained. All operations during the transportation have to be recorded. The equipment shall be kept in balance to avoid falling down.
- Consider the weight of the equipment before moving it. Assign enough personnel to move the equipment to avoid personal injury.
- Contact after-sale service immediately if the battery is not able to be started. Otherwise, the battery might be damaged permanently.
- Do not move the battery when it is working. Contact after-sales service if the battery shall be replaced or added.

**CAUTION**

- Protect the battery system from damage during transportation and storage.
- The transportation must be carried out by trained professionals. All operations during the process have to be recorded.
- Keep the equipment stable to avoid dumping, which can result in equipment damage and personal injuries.
- Place the cables at least 30mm away from the heating components or heat sources, otherwise the insulation layer of the cables may be aging or broken due to high temperature.
- Tie the same type cables together, and place cables of different types at least 30mm apart. Do not place the cables entangled or crossed.

## Label Description

| | | | |
|---|---|---|---|
| | Potential risks exist. Wear proper Personnel Protective Equipment before any operations. | | Install the equipment away from open flames or fire sources. |
| | HIGH VOLTAGE HAZARD High voltage exists during the equipment's running.<br>Ensure the equipment is power off before any operations. | | Keep the equipment away from children. |
| | Operate the equipment properly to avoid explosion. | | Do not lift the equipment after the wiring is completed or when the equipment is working. |
| | The equipment contains corrosive electrolytes. In case of a leak in the equipment, avoid contact the leaked liquid or gas. | | Do not disconnect or plug and unplug the DC connectors during the operation of the equipment. |
| | The battery contains flammable materials, beware of fire. | | Recycle regeneration mark. |
| | Read through the user manual before any operations. | | CE Mark |
| | Pay attention to wear personal protective equipment during installation, operation and maintaining of the equipment. | | Grounding point. |
| | Do not dispose of the equipment with household garbage at its end of life.<br>Dispose it according to local laws and regulations<br>or send it to the manufacturer. | - | - |

## 2.3 Emergency Measures

### Battery Electrolyte Leakage

If the battery module leaks electrolyte, avoid contact with the leaking liquid or gas. The electrolyte is corrosive. It will cause skin irritation or chemical burn to the operator. Anyone contact the leaked substance accidentally has to do as following:

- **Breath in the leaked substance:** Evacuate from the polluted area, and seek immediate medical assistance.
- **Eye contact:** Rinse your eyes for at least 15 minutes with clean water and seek immediate medical assistance.
- **Skin contact:** Thoroughly wash the touch area with soap and clean water, and seek immediate medical assistance.
- **Ingestion:** Induce vomiting, and seek immediate medical assistance.

### Fire

- The battery may explode when the ambient temperature exceeds 150℃. Poisonous and hazard gas may be released if the battery is on fire.
- In the event of a fire, please make sure that the carbon dioxide extinguisher or Novec1230 or FM-200 is nearby.
- The fire cannot be put out by water or ABC dry powder extinguisher. Firefighters are required to wear full protective clothing and self-contained breathing apparatus.

## 2.4 EU Declaration of Conformity

GoodWe Technologies Co., Ltd. hereby declares that the product without wireless communication modules sold in the European market meets the requirements of the following directives:

- Electromagnetic compatibility Directive 2014/30/EU (EMC)
- Electrical Apparatus Low Voltage Directive 2014/35/EU (LVD)
- Battery Directive 2006/66/EC and Amending Directive 2013/56/EU
- Waste Electrical and Electronic Equipment 2012/19/EU
- Registration, Evaluation, Authorization and Restriction of Chemicals (EC) No 1907/2006 (REACH)

You can download the EU Declaration of Conformity on the official website:https://en.goodwe.com.

# 3 Product Introduction

## 3.1 Product Overview

**Intended usage**

The battery system, which consists of a power control unit (PCU for short) and battery modules,can store and release the electric energy according to the requirements of the solar energystorage system. The input and output ports of the energy storage system are high voltage direct current ports.

**Model Description**

This manual applies to the listed battery below:

- LX F6.4-H-20
- LX F9.6- H-20
- LX F12.8- H-20
- LX F16.0- H-20
- LX F19.2- H-20
- LX F22.4- H-20
- LX F25.6- H-20
- LX F28.8- H-20

**Model**

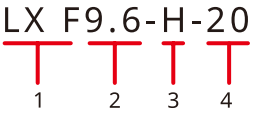


| No. | Referring to | Description |
|---|---|---|
| 1 | Series code | Lynx Home F Series |
| 2 | Usable energy | • 6.4: the usable energy of the battery system is 6.4kWh.<br>• 9.6: the usable energy of the battery system is 9.6kWh.<br>• 12.8: the usable energy of the battery system is 12.8kWh.<br>• 16.0: the usable energy of the battery system is 16.0kWh.<br>• 19.2: the usable energy of the battery system is 19.2kWh.<br>• 22.4: the usable energy of the battery system is 22.4kWh.<br>• 25.6: the usable energy of the battery system is 25.6kWh.<br>• 28.8: the usable energy of the battery system is 28.8kWh. |
| 3 | Product Features | H: high voltage battery |
| 4 | Version code | 20: version of the battery system is 2.0. |

**SN Code**

**********2388****

The 11th-14th digits

The 11th to 14th digits of the product SN code are the production time code.

- The first two numbers are the last two digits of the production year, such as 2023 represented by 23;
- The third number represents the production month, as follows:

| Month | January~September | October | November | December |
|---|---|---|---|---|
| Month's Code | 1~9 | A | B | C |

- The fourth number is the production date, which is represented by numbers first. For example, 1-9 represents the 1st to 9th day, A represents the 10th day, and so on. Letters I and O are not used to avoid confusion. For example:

| Production Date | 1st~9th Day | 10th Day | ... | 18th Day | ... |
|---|---|---|---|---|---|
| Code | 1~9 | A | ... | J | ... |

**Usable energy**

| NOTICE |
| --- |
| • The battery system supports capacity expansion. A maximum of nine battery modules can be used to extend the usable energy of the battery system. Expand the battery system capacity in strict compliance with the expansion requirements. Contact the dealer or manufacturer for more details. Failure to follow the requirements may result in an undervoltage, over-voltage or voltage difference fault in the battery system.<br>• Actual height varies slightly. Refer to the actual installation height. |

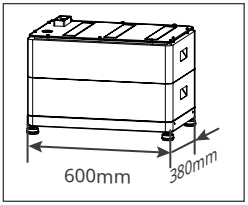


6.4kWh
（LX F6.4-H-20）

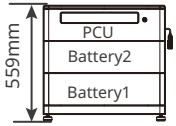


9.6kWh
（LX F9.6-H-20）

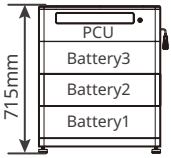


12.8kWh
（LX F12.8-H-20）

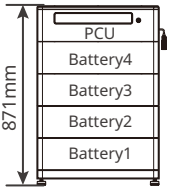


16.0kWh
（LX F16.0-H-20）

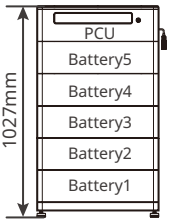


19.2kWh
（LX F19.2-H-20）

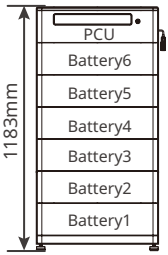


22.4kWh
（LX F22.4-H-20）

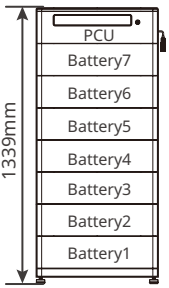


25.6kWh
（LX F25.6-H-20）

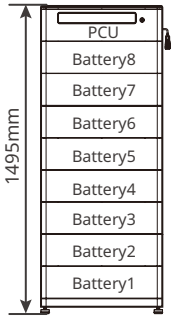


28.8kWh
（LX F28.8-H-20）

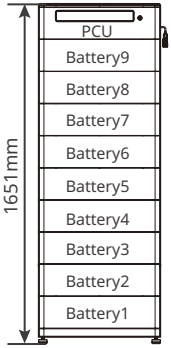

## 3.2 Application Scenarios

**NOTICE**

- A max of eight battery systems can be parallel connected in one energy storage system. Ensure that the usable energy of each battery system is the same.
- Install the circuit breaker between the inverter and the battery and the circuit breaker between the two battery systems in compliance with local laws and regulations. Recommended specifications:
  - Nominal voltage≥750V
  - When a single battery system is applied, the nominal current of the battery: ≥50A.
  - When two battery systems are applied, the nominal current of the battery: ≥100A.
  - When three or more battery systems are applied, the nominal current of the battery: ≥125A.

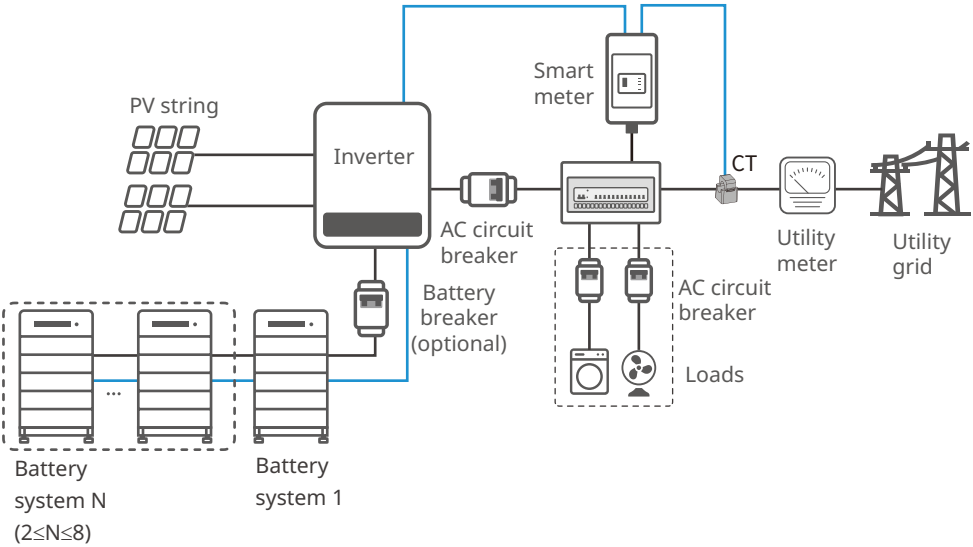


**Approved inverter list**

Scan the QR code below or visit the official website to get the Battery Compatibility Overview.

GoodWe

## 3.3 Appearance

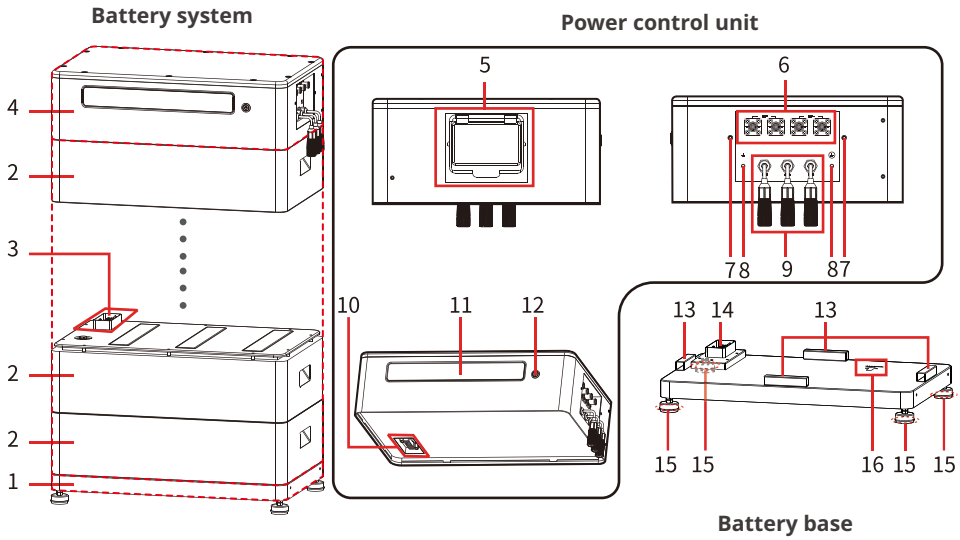


| No. | Parts | Description |
|---|---|---|
| 1 | Battery base | - |
| 2 | Battery module | 3 to 9 battery modules can be connected in the battery system. |
| 3 | Battery serial connection interface | Connects the battery module to the next module or to the power control unit. |
| 4 | Power control unit | Controls battery system. |
| 5 | Battery system switch | Switches the battery system on or off. |
| 6 | DC cable port (BAT) | Connects the DC cables of the battery system to the inverter. Includes two BAT+ ports and two BAT- ports. The two BAT+ or BATport are functionally identical. |
| 7 | Protective cover installation hole | Used for installing protective cover.Some version of battery has these installation holes. |
| 8 | Grounding point | Connects grounding cables to the grounding points for protection. |

| No. | Parts | Description |
|---|---|---|
| 9 | Communication terminal (COM) | Connects the communication cable between the battery and inverter or two batteries. COM3 is reserved. |
| 10 | Power control unit serial connection interface | Connects the power control unit to a battery module. |
| 11 | SOC indicator | • SOC indicator: indicates the SOC status of the battery.<br>• Multi-function button indicator<br>  • Black start button: When there is no PV power generation in the PV system and the power grid is abnormal, long press the multi-function button for 5s to 10s, and then release it to start the battery system. Use the battery power to provide starting voltage for the inverter, thereby enabling the inverter to enter off-grid mode for operation.<br>  • Long press the multi-function button for 15s to power off the battery system.<br>• Combines the SOC indicator and multi-function button indicator to check the battery system working status, alarm status and fault status. |
| 12 | Multi-function button indicator | |
| 13 | Battery installation limit | Fix the battery to prevent it from tilting. |
| 14 | Battery base serial connection interface | Connects the power control unit to a battery module. |
| 15 | Adjustable feet | Adjusts the distance between the battery base and the ground. |
| 16 | Direction arrow for battery base | Ensure that the arrow in the battery base points towards the wall when installing the battery base. |

# 4 Check and Storage

## 4.1 Check Before Receiving

Check the following items before receiving the product.

1. Check the outer packing box for damage, such as holes, cracks, deformation, and other signs of equipment damage. Do not unpack the contents from the box and contact the supplier as soon as possible if any damage is found.
2. Check the outer packing box for damage, such as holes, cracks, deformation, and other signs of equipment damage. Do not unpack the package and contact the supplier as soon as possible if any damage is found.
3. Check the deliverables for correct model, complete contents, and intact appearance. Contact the supplier as soon as possible if any damage is found.

## 4.2 Deliverables

**Power control unit**

**NOTICE**

- The quantity of Cover plate or Junction box depends on the battery model.
- N: Quantity depends on product configuration:
  - ◊ M5*12 screws x 8, M6 screw x 2
  - ◊ M5*12 screws x10, M6 screw x 2
  - ◊ M5*12 screws x 11, M6 screw x 2
  - ◊ M5*12 screws x 13, M6 screw x 0
  - ◊ M5*12 screws ×12, M6 screw x 0

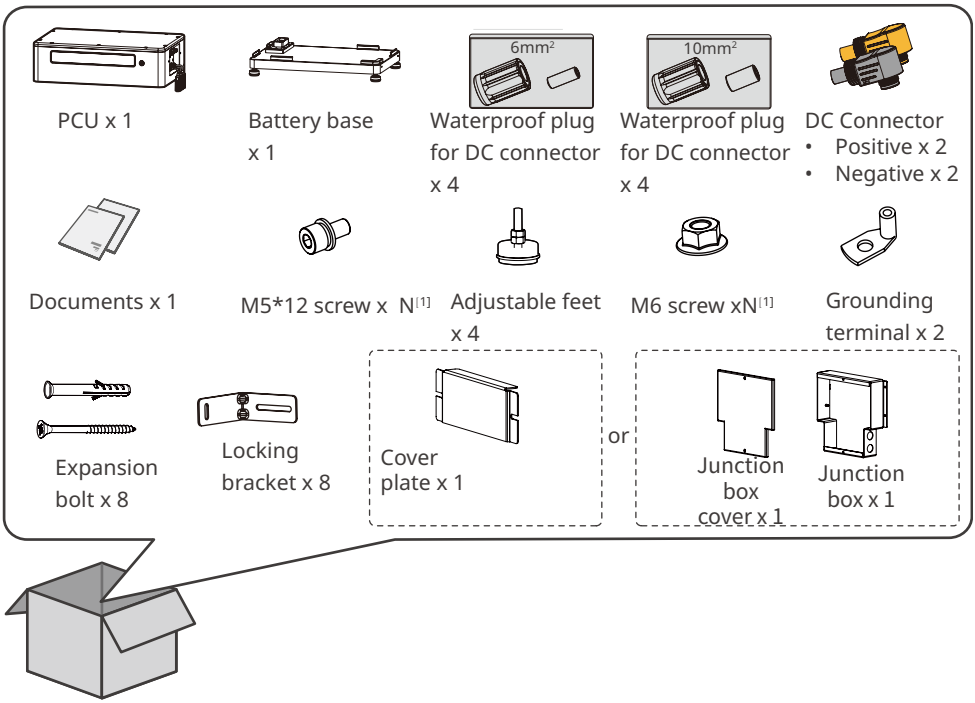

**Battery module**

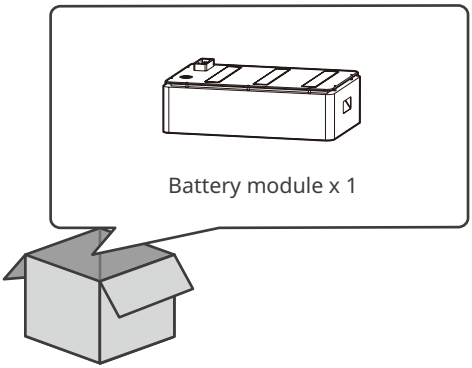


## 4.3 Storage

If the equipment is not to be installed or used immediately, please ensure that the storage environment meets the following requirements:

1. Do not unpack the outer package or throw the desiccant away.
2. Complete the equipment installation in three days after unpacking it. Pack and store the equipment using the original packing box if it is not installed.
3. Stack the equipment complying with the labels and requirements on the packing box.
4. The equipment must be stacked with caution to prevent them from falling.
5. Keep the equipment away from flammable, explosive, and corrosive matters.
6. Place the equipment in a cool place where away from direct sunlight.
7. Store the equipment in a clean place. Make sure the temperature and humidity are appropriate and no condensation.
8. Recommended storage humidity: 0%~95%RH (no condensation). Do not install the battery system if there is any moisture or condensation.
9. In order to protect the performance and life of the battery, it is recommended to avoid unused storage for a long period of time. Prolonged storage may cause deep discharging of the battery, resulting in irreversible chemical loss, leading to capacity degradation or even complete failure, timely use is recommended. If the battery is to be stored for a long period of time, please maintain it as follows:

| Specific Model | Battery storage initial SOC range | Recommended Storage Temperature | Charing and Discharging Maintaining Period [1] | Battery Maintaining Method [2] |
|---|---|---|---|---|
| LX F6.4-H-20 | 30%~40% | 0~35℃ | -20~0℃, ≤1 month<br>0~35℃, ≤6 months<br>35~45℃, ≤1 months | Contact the dealer or the after-sales service for maintenance methods. |
| LX F9.6-H-20 | | | | |
| LX F12.8-H-20 | | | | |
| LX F16.0-H-20 | | | | |
| LX F19.2-H-20 | | | | |
| LX F22.4-H-20 | | | | |
| LX F25.6-H-20 | | | | |
| LX F28.8-H-20 | | | | |

**NOTICE**

[1] The storage time starts from the SN date on the outer packaging of the battery and requires charging and discharging maintenance after the storage cycle is exceeded. (Battery maintenance time = SN date + charging/discharging maintenance cycle). To view the SN date, please refer to the meaning of SN code.

[2] After passing the charging/discharging maintenance, if there is a Maintaining Label attached to the outer box, then please update the maintenance information on the Maintaining Label. if there is no Maintaining Label, please record the maintenance time and SOC of the batteries and keep the data to facilitate the keeping of maintenance records.

# 5 System Installation

## 5.1 Installation Requirements

| NOTICE |
| --- |
| Ensure that the installation requirements complies with local laws, regulations, and related standards. |

**Installation Environment Requirements**

1. Do not install the equipment in a place near flammable, explosive, or corrosive materials.
2. Do not install the equipment in a place that is easy to touch, especially within children's reach. High temperature exists when the equipment is working. Do not touch the surface to avoid burning.
3. Avoid the water pipes and cables buried in the wall when drilling holes.
4. It is recommended to install the device away from direct sunlight, rain, snow-accumulation and similar conditions, and prioritize sheltered locations. If full avoidance is not feasible, ensure ambient temperature, humidity and other conditions remain within the ranges specified in the device datasheet at all times.
5. Select installation and storage sites away from direct cold-air blasts such as air-conditioner outlets. Excessive local temperature difference may cause condensation inside the device, which can result in equipment damage.
6. The place to install the equipment shall be well-ventilated for heat dissipation and large enough for operations.
7. The equipment with a high ingress protection rating can be installed indoors or outdoors. The temperature and humidity at the installation site should be within the appropriate range.
8. Install the equipment at a height that is convenient for operation and maintenance, electrical connections, and checking indicators and labels.
9. The altitude to install the equipment shall be lower than the maximum working altitude 3000m.
10. Install the equipment away from electromagnetic interference. Install the product away from electromagnetic interference. If there is any radio or wireless communication equipment below 30MHz near the equipment, make sure that the inverter is at least 30m far away from the wireless equipment.

| NOTICE |
| --- |
| • If installed in an environment below 0°C, the battery will not be able to continue charging to restore energy after being discharged, resulting in undervoltage protection.<br>• Lynx home F G2 : Charging temperature range : 0<T<50°C ; Discharging temperature range : -20<T<50°C |

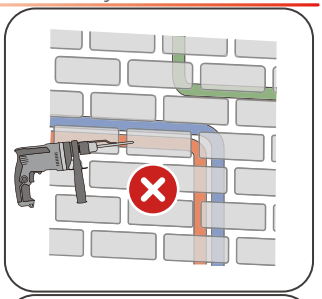

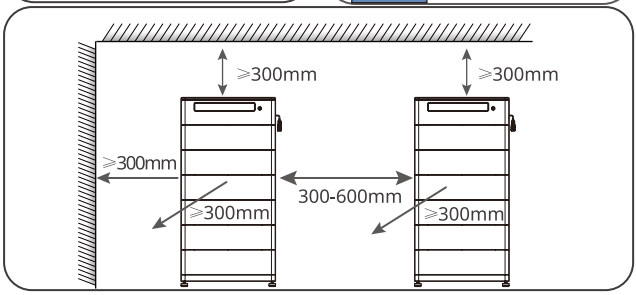


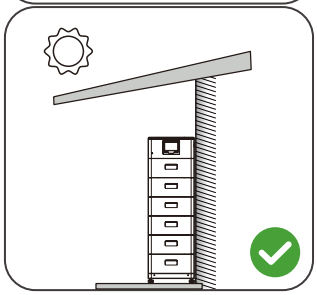

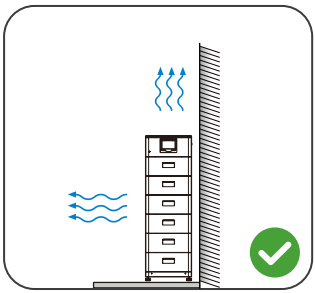

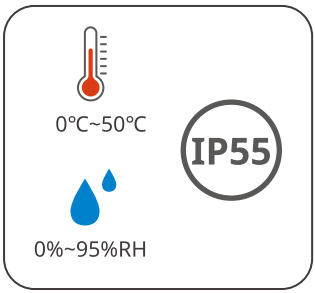


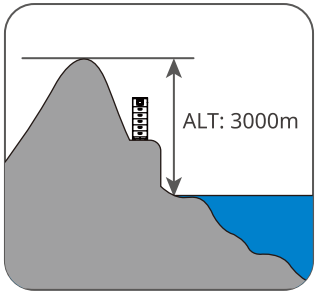


**Mounting Support Requirements**

- The mounting support shall be nonflammable and fireproof.
- Install the equipment on a surface that is solid enough to bear the product weight.
- Put the battery system near the wall and install the locking brackets to prevent the battery from falling down.

**Installation Angle Requirements**

- Install the equipment vertically, no tilt or upside down.

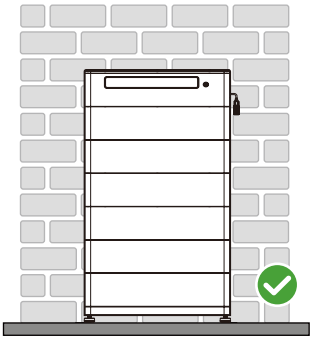

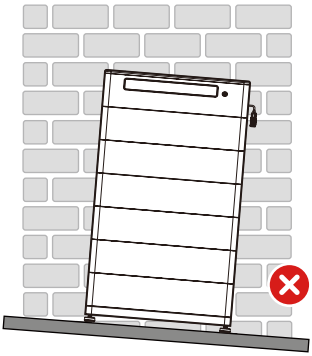

## 5.2 Installing the Battery System

### 5.2.1 Moving the Equipment

**CAUTION**

- Operations such as transportation, shipment, installation and so on shall in compliance with the laws and regulations of the country or region where the inverter is located.
- Move the equipment to the site before installation. Follow the instructions below to avoid personal injury or equipment damage.
  1. Consider the weight of the equipment before moving it. Assign enough personnel to move the equipment to avoid personal injury.
  2. Wear safety gloves to avoid personal injury.
  3. Keep balance to avoid falling down when moving the equipment.

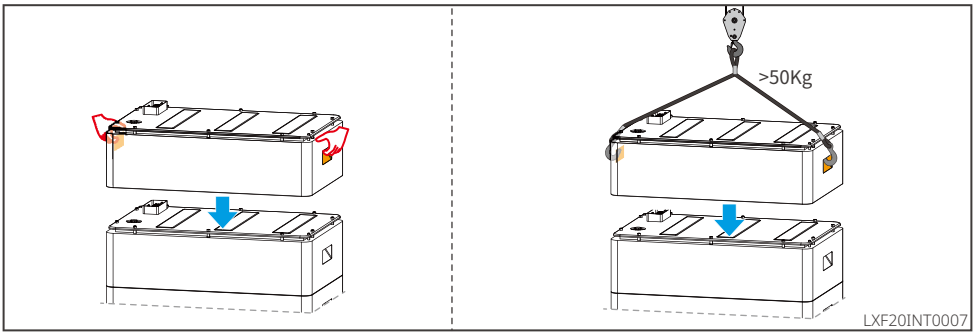


### 5.2.2 Installing the Battery System

**WARNING**

- Ensure that the PCU is installed above the battery modules. Do not install any battery modules above the PCU.
- Ensure that the battery system is installed vertically and securely. Align the installation holes of the battery base, battery modules, and PCU. Put the locking bracket cling to the wall, ground, and the battery system.
- Remove the PCU after marking the drilling positions to avoid damage to the unit when drilling holes using the drill.
- Cover the battery system with a cardboard to prevent foreign matters when drilling holes, which may damage the system.
- Remove the cover of the battery module's connection port before installing the battery system.

**Step 1** (Optional) Install the adjustable feet to the base.

**Step 2** Install the locking bracket to the base.

**Step 3** Place the base cling to the wall and mark the drilling positions. Then remove the base.

**Step 4** Drill holes with the hammer drill. Screw the expansion bolts to fix the base. Ensure that the base is installed in the correct direction.

**Step 5** Remove the cover in front of the battery wiring terminal.

**Step 6** Place the battery module on the base, and ensure that the base and the battery are installed in the same direction. Install the remaining batteries and PCU based on the actual needs.

**Step 7** Install the locking bracket of the PCU.
**Step 8** Put the PCU above the installed battery module securely. Mark the drilling hole using a marker, then remove the PCU.
**Step 9** Drill holes with the hammer drill.
**Step 10** Secure the locking bracket to prevent the PCU from falling down.
**Step 11**
- (Optional) Fix the locking bracket of PCU.
- (Optional) Install junction box.

**Step 12** Check the battery system to ensure that it is installed vertically and securely. In case of tilting or shaking, the battery system can be adjusted by rotating the adjust feet.

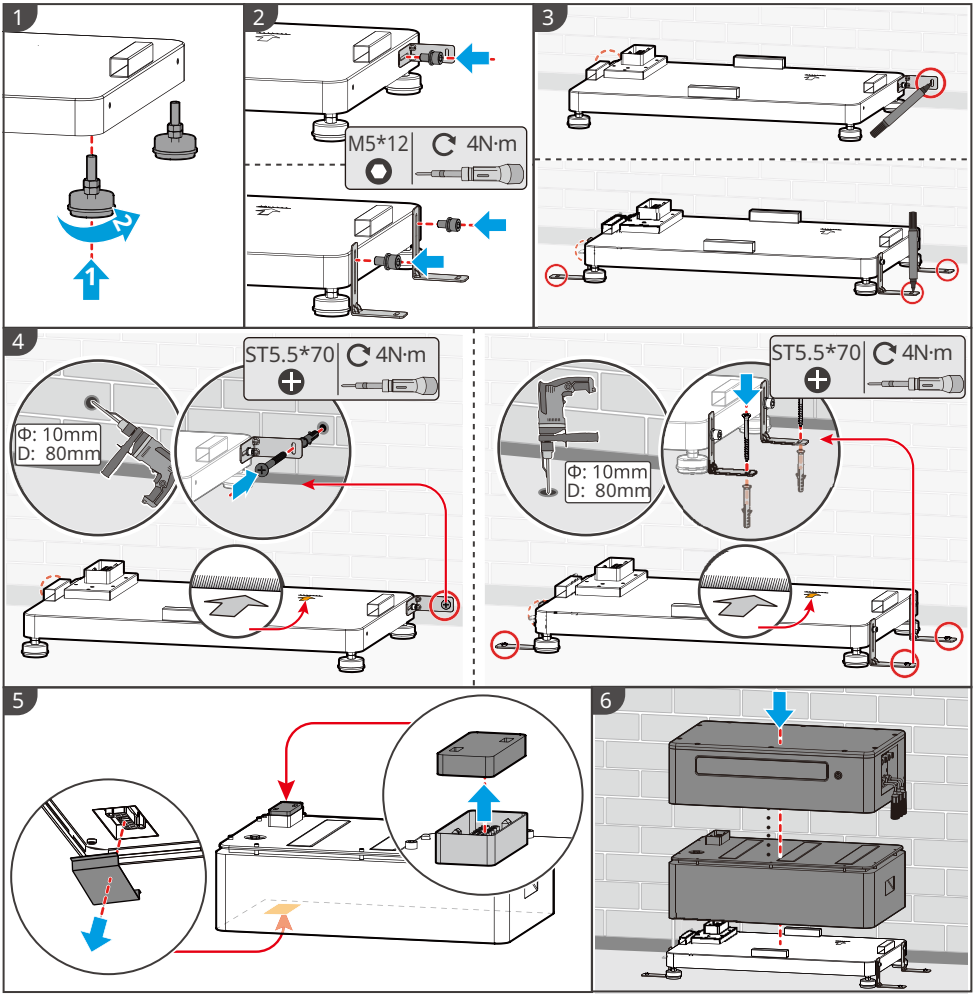

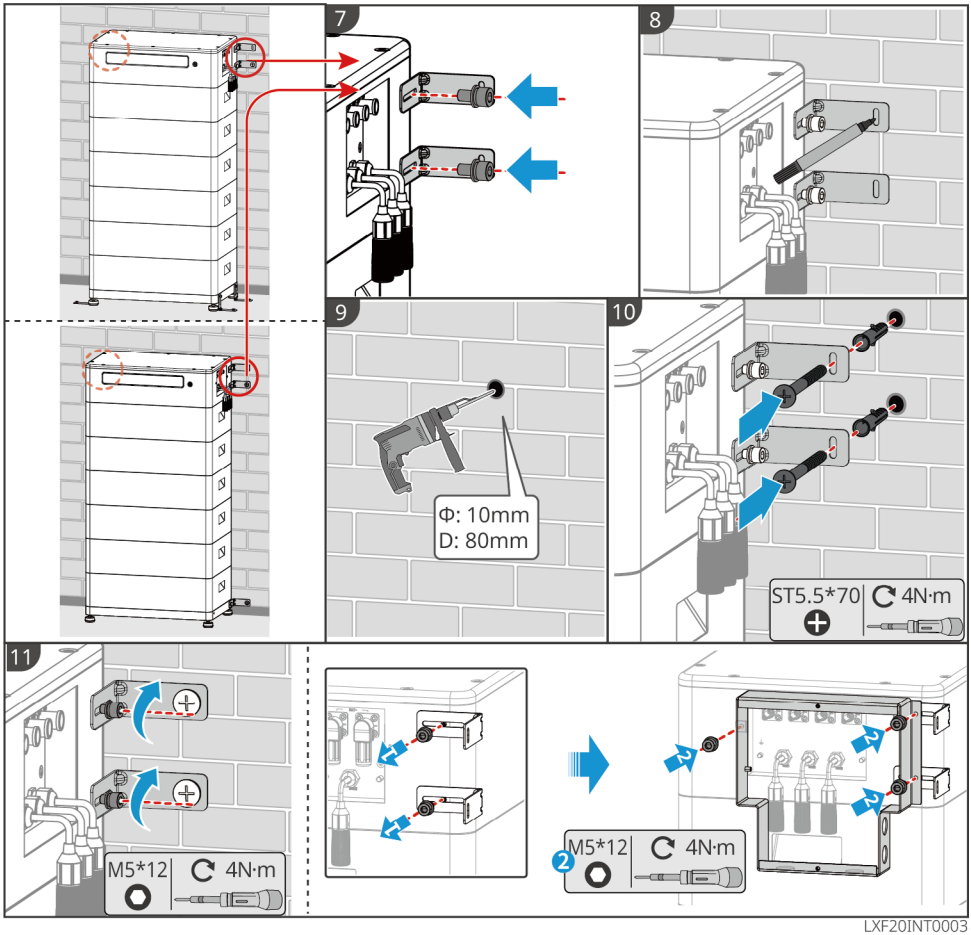


LXF20INT0003

# 6 Electrical Connection

## 6.1 Safety Precaution

**DANGER**

- High voltage exists during the battery system running. Ensure that the equipment has been powered off to avoid the risk of electric shock before operating the device in the system. Strictly follow all safety precautions outlined in this manual and safety labels on the equipment during the operation.
- All operations, cables and parts specification during the electrical connection shall be in compliance with local laws and regulations.
- Tie the cables of the same type together, and place cables of different types apart. Do not place the cables entangled or crossed.
- Make sure that the cable conductor is in full contact with the terminal and the cable insulation part is not crimped with the terminal when crimping the terminal. Otherwise, the inverter may not be able to work properly, or the connection may be unreliable during working, which may cause terminal block damage, etc.

**NOTICE**

- Wear personal protective equipment like safety shoes, safety gloves, and insulating gloves during electrical connections.
- All electrical connections should be performed by qualified professionals.
- Cable colors in this document are for reference only. The cable specifications shall meet local laws and regulations.

## 6.2 Electrical Connection

### Single Battery System

**NOTICE**

- Please ensure that the COM1 communication port is connected to the inverter, and the COM2 communication port is equipped with a terminal resistor when the PCU leaving the factory. The battery system cannot work properly if the termination resistor is not installed.
- The COM3 port is reserved. Do not connect any cable to the port.

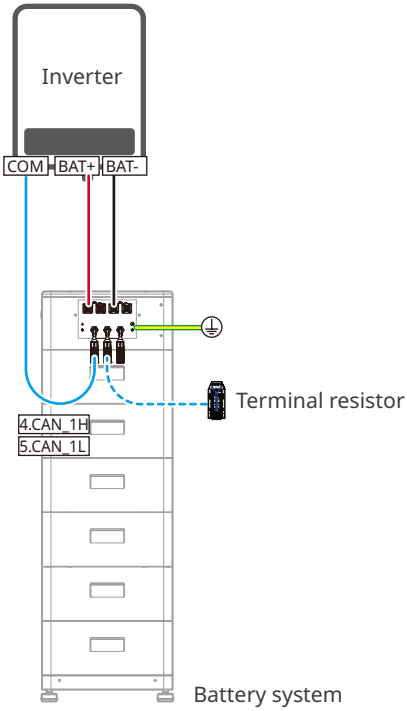


### Parallel Connected Battery Systems

**NOTICE**

- A max of eight battery systems can be parallel connected in one energy storage system. Ensure that the usable energy of each battery system is the same.
- Please ensure that the COM1 communication port of battery system 1 is connected to the inverter, and the COM2 communication port is used for battery connection. The COM2 of the PCU has installed terminal resistors when leaving factory. If you need to connect communication cables, please remove the terminal resistors. If the COM2 port of battery system N is not equipped with terminal resistor, it will cause the battery system to not function properly.
- The COM3 port is reserved. Do not connect any cable to the port.

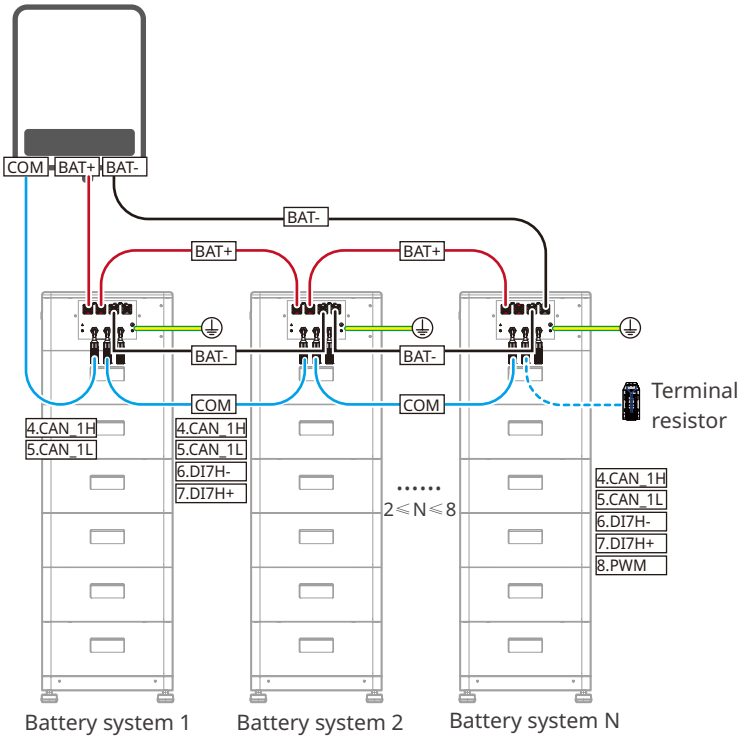


Threading (Optional)

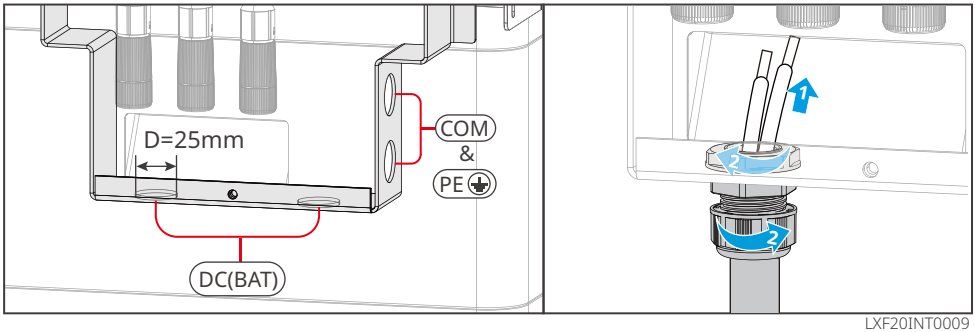


LXF20INT0009

## 6.3 Connecting the PE cable

**NOTICE**

- Connect the PE cable first before installing the equipment. Disconnect the PE cable before dismantling the equipment.
- Make sure that the drawing force of the cable after crimping is greater than 400N.
- The PE cable should be prepared by the customer. Recommended specifications:
  - Type: single-core outdoor copper cable
  - Cross-sectional area: 6mm2

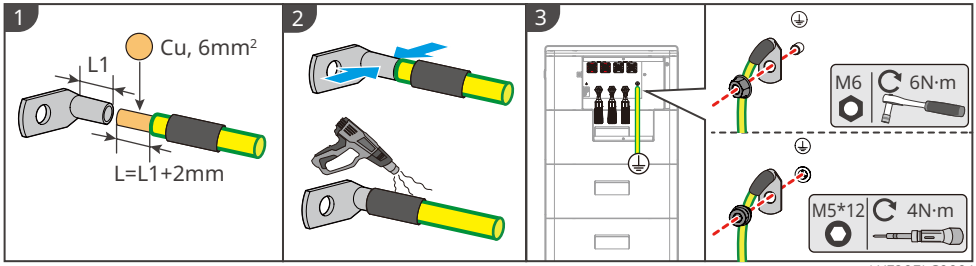


LXF20ELC0001

## 6.4 Connecting the Power Cable

**WARNING**

- The DC cable should be prepared by the customer. Recommended specifications:
  - Type: single-core outdoor copper cable
  - Conductor cross-sectional area S: S=6mm² or S=10mm²
- When the cross-sectional area range of the conductor is 6mm², a 6mm² DC connector (included in the deliverables) should be used. The drawing force of the cable after crimping should be greater than 450N. DC cables in this range can only be used to connect a single battery system. Do not cluster battery systems together as this may result in damage to the system.
- When the cross-sectional area range of the conductor is 10mm², 10mm² DC connector (included in the deliverables) should be used. The drawing force of the cable after crimping should be greater than 500N.
- It is recommended to use a YQK-70 hydraulic plier to crimp the DC terminal of the battery. When the cross-sectional area of the conductor is 6mm², the crimping dies with an "6" should be used, when the cross-sectional area of the conductor is 10mm², the crimping dies with an "10" should be used.
- If the recommended hydraulic plier cannot be purchased, please choose the crimping tool according to the terminal size to ensure that the crimped terminals meet the usage requirements.
- Do not remove the cover of the DC cable port if the DC cable is not to be connected. Otherwise, the protection degree may be influenced.

**Crimping size**

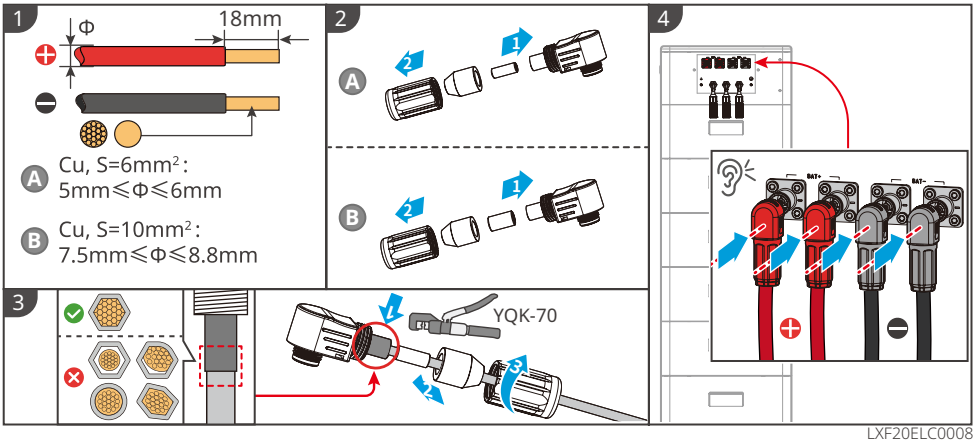


LXF20ELC0008

## 6.5 Connecting the Communication Cable

**WARNING**

- If the communication cable between the inverter and the battery system is supplied by the inverter manufacturer, you can decide whether to use the supplied cable or not according to the actual situation. Refer to the user manual of the inverter for detailed cable specifications.
- When making communication cables, please ensure that the definition of the battery communication port matches the definition of the inverter communication port. Otherwise, it will cause communication failure.
- If you need to prepare the communication cable, the recommended specifications are: standard network cable and RJ45 connector.

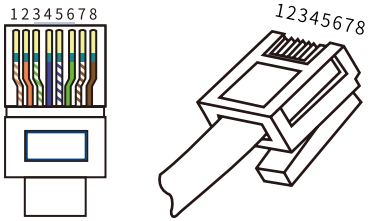


### Port Definition

| PIN | COM1 | COM2 | Description |
|---|---|---|---|
| 1 | RS485A | RS485A | Connecting external communication devices via RS485. |
| 2 | RS485B | RS485B | |
| 3 | - | - | Reserved |
| 4 | CAN_1H | CAN_1H | Connecting the inverter communication port or battery parallel communication port |
| 5 | CAN_1L | CAN_1L | |
| 6 | DI7H- | DI7H- | Detects the cluster signal of the battery system. |
| 7 | DI7H+ | DI7H+ | |
| 8 | - | PWM | Sending paralleled PWM signals. |

**WARNING**

- Detailed requirements for communication cable connection and termination resistor installation can be obtained in the system wiring network. This chapter only describes the connection method of communication cables and port definitions.
- If the termination resistor is not installed, the Interlock Failure will occur, and the battery system cannot work correctly.

## Connecting the Communication Cable

**Step 1**: Disassemble the waterproof module.

**Step 2**: Run the communication cable through the waterproof module.

**Step 3**: Connect the communication cable to the battery system. Tighten the waterproof module.

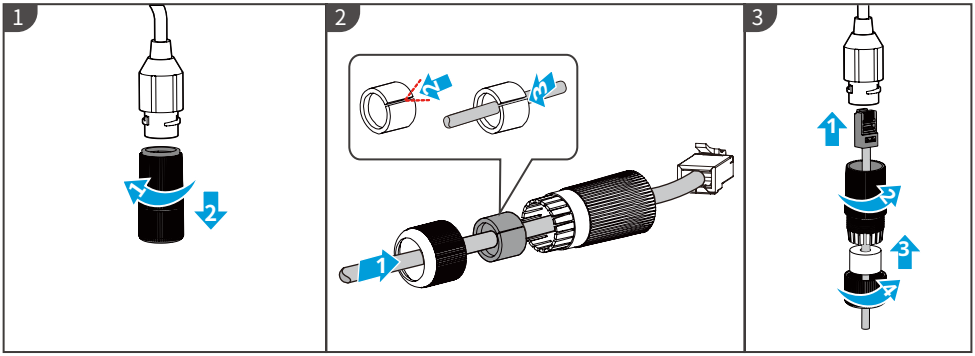


### Removing the Termination Resistor

**Step 1**: Disassemble the waterproof module.

**Step 2**: Remove the termination resistor.

**Step 3**: Connecting the communication cable to the battery.Tighten the waterproof module.

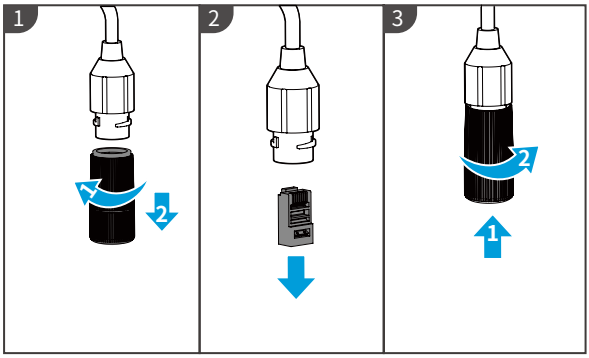

## 6.6 (Optional) Installing the Protective Cover

This step is only applicable to batteries with protective cover installation holes. The protecive cover plate can only be installed after completing the wiring.

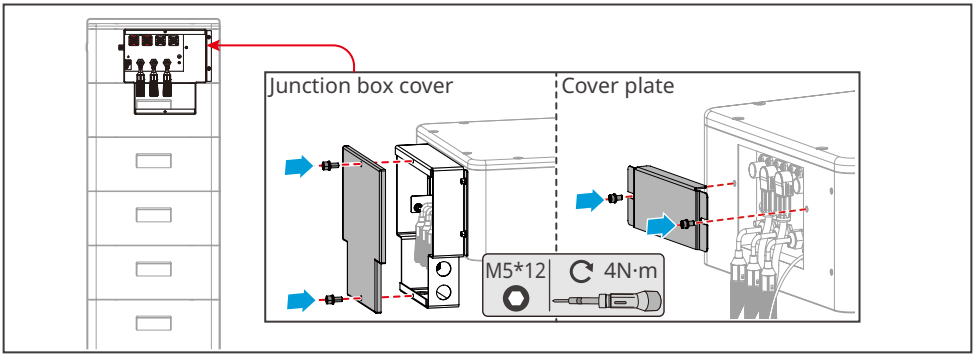

# 7 System Operation

## 7.1 Check Before Power ON

Check the following items before power on to avoid the battery system being damaged.

| No. | Check Item |
|---|---|
| 1 | The system is firmly installed in a clean place where is well-ventilated and easy to operate. |
| 2 | The PE cable, power cable, communication cable, and termination resistor are connected correctly and securely. |
| 3 | Cable ties are intact, routed properly and evenly. |
| 4 | Unused ports and terminals are sealed. |

## 7.2 Power On

**NOTICE**

- The equipment in the dashed boxes are optional.
- Install the circuit breaker between the inverter and the battery and the circuit breaker between the two battery systems in compliance with local laws and regulations.
- Strictly follow the power on requirements to avoid damaging the system.
- To ensure effective protection, the cover of the battery system switch should remain closed. The cover can be closed automatically after being opened. Fasten the cover with screws if the switch is not to be used for a long-term period.

Open the cover

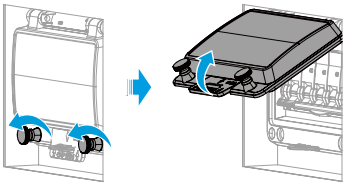

Close the cover

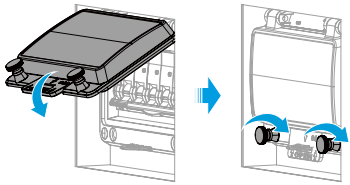

**Method I:**

**Step 1**:Turn on the breaker between the inverter and the battery system.

**Step 2**:(Optional) Turn on the breaker between the battery systems if they are clustered.

**Step 3**:Turn on the battery system switch. Turn on the switches of the battery systems in turn if they are clustered.

**Step 4**:Turn on the inverter in the system following the instructions in the user manual of the inverter.

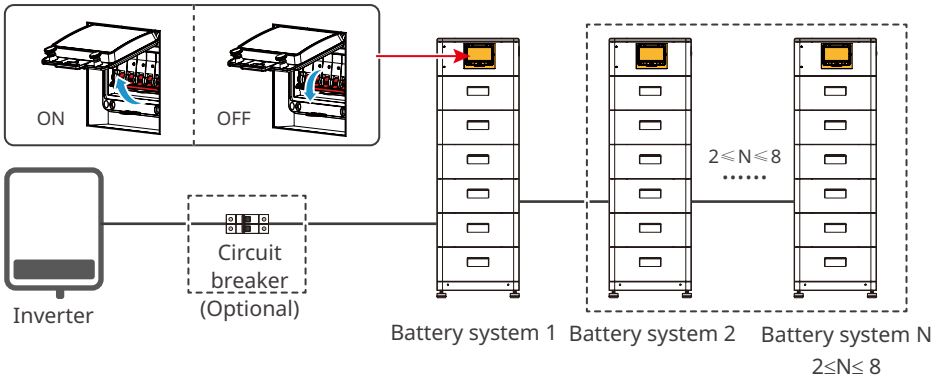


| NOTICE |
| --- |
| • Black start button: When there is no PV power generation in the PV system and the power grid is abnormal, long press the multi-button for 5s to 10s, and then release it to start the battery system. Use the battery power to provide starting voltage for the inverter, thereby enabling the inverter to enter off-grid mode for operation.<br>• After the battery system is started, set the battery model through SolarGo App within 10 minutes to ensure normal communication between the inverter and the battery. |

**Method II:**

Step 1: Long press the multi-function button on the PCU for 5s to 10s, then release it to start the battery system. If it is a parallel battery system, long press the multi-function button of the battery system in sequence.

Step 2:Turn on the inverter in the system following the instructions in the user manual of the inverter.

## 7.3 Setting the Battery Parameters

| NOTICE |
| --- |
| Select the battery model via App after powering on the battery system, so that the battery system can work properly.<br>Please connect the inverter to the APP and set the relevant battery parameters. |

Download App.

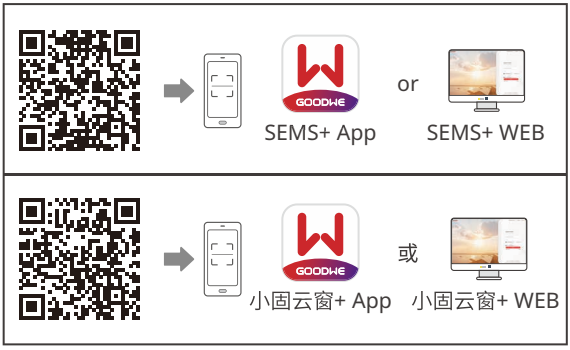

**Step 2**: Connects inverter to the App.

**Step 3**: Tap **Home** > **Parameters** > **Basic Setting** to set the basic parameters. Follow the prompts to select and set the battery model.

| NOTICE |
| --- |
| Select the wrong battery model may cause system failure. Ensure that the battery model is right. |

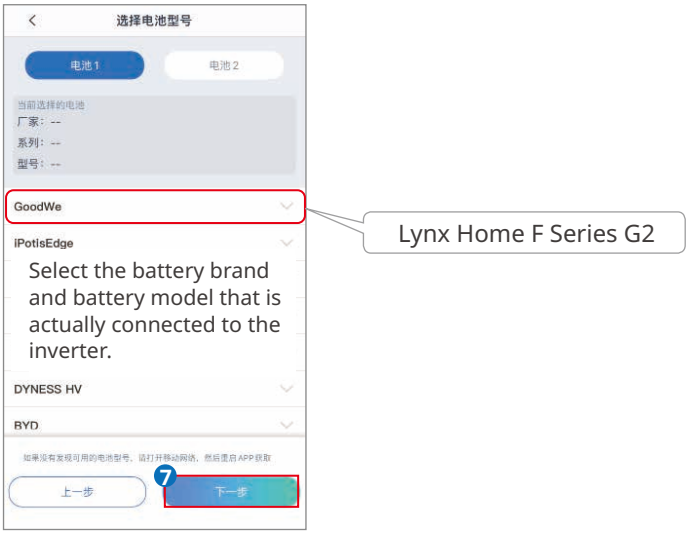

## 7.4 Indicator Status

### Normal status

| SOC indicator status 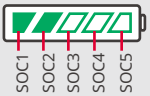  | Button Indicator status | Battery system status |
|---|---|---|
| SOC indicator indicates SOC of the battery system.<br>SOC<5%<br>5%≤SOC<25%<br>25%≤SOC<50%<br>50%≤SOC<75%<br>75%≤SOC<95%<br>95%≤SOC≤100% | Green light blink 1 time/s | The battery system is in standby status. |
| | Green light blink 2 time/s | The battery system is in idle status. |
| | Steady green light | The battery system is in charging status.<br>Note: When the battery SOC reaches the limit charging SOC, the charging will stop. |
| The last SOC indicator blinks 1 time/s.<br>• When 5%≤SOC<25%, SOC 1 blinks.<br>• When 25%≤SOC<50%, SOC 2 blinks.<br>• When 50%≤SOC<75%, SOC 3 blinks.<br>• When 75%≤SOC<95%, SOC 4 blinks.<br>• When 95%≤SOC≤ 100%, SOC 5 blinks. | Steady green light | The battery system is in discharging status.<br>Note: When the system does not need to supply power to the load or the battery SOC is below the set discharge depth, the battery will no longer discharge. |

### Abnormal status

| Button indicator | Battery system status | Solutions |
|---|---|---|
| Red light blink 1 times/s | Battery system alarm | Once an alarm occurs, the battery system will perform a self-check. After the battery system self-check is complete, the battery system enters operation or fault mode. |
| Steady red light | Battery system fault | Check both the button indicator and the SOC indicator status to determine the fault that has occurred and handle the problem follow the methods recommended in the Troubleshooting section. |

# 8 Maintenance

## 8.1 Power OFF the Battery System

**DANGER**

- Power off the battery system before operations and maintenance. Otherwise, the equipment may be damaged or electric shocks may occur.
- Strictly follow the power off requirements to avoid damaging the system.
- When the circuit breaker is tripped, all live conductors in the positive and negative circuits are disconnected. The equipment enters a safe power-off state with no exposed hazardous live parts, eliminating electric shock hazards upon human contact.

**NOTICE**

- The equipment in the dashed boxes are optional.
- Install the circuit breaker between the inverter and the battery and the circuit breaker between the two battery systems in compliance with local laws and regulations.
- To ensure effective protection, the cover of the battery system switch should remain closed. The cover can be closed automatically after being opened. Fasten the cover with screws if the switch is not to be used for a long-term period.

**Method I:**
**Step 1**: Turn off the inverter in the system following the instructions in the user manual of the inverter.

**Step 2**: Turn off the circuit breaker between the inverter and the battery.

**Step 3**:(Optional) Turn off the breakers between the battery systems if they are clustered.

**Step 4**: Turn off the battery system switch. Turn off the switches of the battery systems in turn if they are clustered.

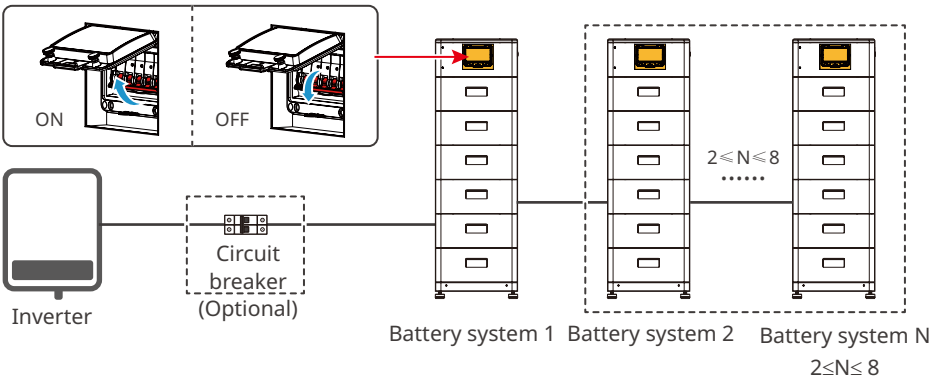

**Method II:**
**Step 1**:Turn off the inverter in the system following the instructions in the user manual of the inverter.

**Step 2**:Long press the multi-function button indicator for more than 15s and release it, make sure that the SOC indicator and multi-function button indicator of the PCU are off.

## 8.2 Routine Maintenance

**WARNING**

- Contact the after-sales service for help if you find any problems that may influence the battery or the hybrid inverter. Disassemble without permission is strictly forbidden.
- Contact after-sale service for help if the copper conductor is exposed. Do not touch or disassemble privately because the high voltage danger exists.
- In case of other emergencies, contact the after-sales service as soon as possible. Operate following the instructions or wait for the after-sales service personnel.

| Maintaining Item | Maintaining Period |
|---|---|
| Check whether the locking bracket is secured, tighten it if not. | Once every 6 months |
| Check whether the outer enclosure is broken. Repair the painting or contact the after-sales service if there is any broken. | Once every 6 months |
| Check whether the cables are exposed. Replace the exposed cable or contact the after-sales service for help. | Once every 6 months |
| Check whether there is any dust around the battery module. Clean the dust if there is any to avoid affecting heat dissipation. | Once every 6 months |
| Check whether there is any liquid or pest near the battery to avoid intrusion in a long term. | Once every 6 months |

## 8.3 Common Problem Handling

| Problem | Cause | Solutions |
|---|---|---|
| Battery system tilt | The ground is uneven or deformed | 1. Adjust the height of the anchor nut.<br>2. Replace to hard ground. |
| PCU shaking | The screws of the L-shaped bracket fixing the PCU to the wall are not tightened. | Tighten the L-shaped bracket of the battery system. |
| The gap between the PCU and the battery module is too large to stack | 1. The blind mate connectors of the PCU and battery module in the battery system are not corresponding<br>2. The cover plate of the battery module wiring port was not removed | 1. Adjust the module position to ensure that the PCU and battery modules are stacked without misalignment.<br>2. Remove the cover plate of the battery module wiring port. |
| The indicator light goes out and the battery switch trips during operation. | Cable short circuit or internal failure of battery system. | 1. Check for short circuits in external cables.<br>2. Power off and wait for 2 hours, then power on. |

| | | |
|---|---|---|
| The red button indicator light blinks, the SOC light shows battery level, and there is no "click" sound when the relay is closed | 1. Communication fault.<br>2. Battery model setting error in SolarGo APP. | 1. Check if the terminal resistor of COM2 port is installed correctly.<br>2. Check if the communication cables are correct.<br>3. Check if the inverter is working properly.<br>4. Set the battery system model through the SolarGo App.<br>5. If the problem persists, long press the multi-function button for 5s to 10s then release it, confirm if there is a "click" sound from the relay, and report the situation to the dealer. |

## 8.4 System Troubleshooting

The battery system may power off automatically and some functions may not work properly once the battery system fails. Perform troubleshooting according to the following methods. Contact the after-sales service if these methods do not work. Collect the information below before contacting the after-sales service, so that the problems can be solved quickly.

1. Battery information, such as: serial number, software version, when the device was installed, when the fault occurred, how often it occurred, etc.
2. Ambient environment, such as: weather conditions and installation environment. Photos, videos and other files can be provided to assist in the analysis of the problem.

ON

| SOC indicator status | Fault | Solutions |
|---|---|---|
| | Battery Overvoltage | Power off and wait for 2 hours. Contact the after-sale service if the problem persists. |
| | Battery Undervoltage | Contact the after-sale service. |
| | High Cell Temperature | 1. There are heat sources around the battery system, such as open flames, boilers, or other heating devices. Please keep the battery system away from heat sources.<br>2. Power off the battery and wait for the temperature to recover before powering it on again. Contact the after-sale service if the problem persists. |
| | Excessive temperature difference | |
| | Low Charging Temperature | 1. The environment temperature is too low. Check the environment to ensure that the installation temperature of the battery system meets the operating temperature range of the battery.<br>2. Power off the battery and wait for the temperature to recover before powering it on again. |
| | Low Discharging Temperature | |

| | | |
|---|---|---|
| | Overcurrent Charging | Restart the battery. Contact the after-sale service if the problem persists. |
| | Overcurrent Discharging | Restart the battery. Contact the after-sale service if the problem persists. |
| | Low Insulation Resistance | Contact the after-sale service. |
| | Voltage Difference Exception | Restart the battery and leave it for 12 hours. Contact the after-sale service if the problem persists |
| | Inconsistent Cell | Some battery modules in the battery system have incorrect models. Please contact the dealer to replace the battery module and reinstall it. |
| | Wire Harness Exception | Restart the battery. Contact the after-sale service if the problem persists. |
| | Relay Connection Failure | Restart the battery. Contact the after-sale service if the problem persists. |
| | Relay Adhesion | Restart the battery. Contact the after-sale service if the problem persists. |
| | Cluster Fault | Check the battery model. Contact the after-sale service if the battery model is incorrect. |
| | Interlock Failure | 1. Check whether the termination resistor is installed properly and restart the battery.<br>2. Contact the after-sale service if the problem persists. |
| | BMU Communication Fault | Restart the battery. Contact the after-sale service if the problem persists. |
| | MCU Internal Communication Fault | Restart the battery. Contact the after-sale service if the problem persists. |
| | Air Switch Adhesion | Contact the after-sale service. |
| | Precharge Failure | Restart the battery. Contact the after-sale service if the problem persists. |
| | Relay Overtemperature | Power off and wait for 2 hours. Contact the after-sale service if the problem persists. |
| | Current Diverter Overtemperature | Power off and wait for 2 hours. Contact the after-sale service if the problem persists. |
| | Reverse Connection Fault | The positive and negative poles of the battery system power cable are reversed. Please reconnect the power cable. |
| | Microelectronic Fault | Contact the after-sale service. |

Red light blink 1 times/s

| SOC indicator status | Fault | Solutions |
|---|---|---|
| | Battery Overvoltage | Power off and wait for 2 hours. Contact the after-sale service if the problem persists. |
| | Battery Undervoltage | Contact the after-sale service. |
| Display the current battery level of the battery system | Battery overcurrent | Restart the battery. Contact the after-sale service if the problem persists. |
| Display the current battery level of the battery system | Excessive temperature difference | 1. Check the environment to ensure that the installation temperature of the battery system meets the operating temperature range of the battery.<br>2. Power off the battery and wait for the temperature to recover before powering it on again. |
| Display the current battery level of the battery system | Excessive pressure difference | Restart the battery and leave it for 12 hours. Contact the after-sale service if the problem persists |
| Display the current battery level of the battery system | Lost communication with inverter | 1. Check if the communication between the battery and the inverter is normal.<br>2. Restart the battery. Contact the after-sale service if the problem persists. |

# 9 Technical Parameters

| Technical Parameters | | LX F6.4-H-20 | LX F9.6- H-20 | LX F12.8-H-20 | LX F16.0-H-20 |
|---|---|---|---|---|---|
| Usable Energy (kWh)*1 | | 6.4 | 9.6 | 12.8 | 16.0 |
| Battery Module | | LX F3.2-20: 64V 3.2kWh | | | |
| Number of Modules | | 2 | 3 | 4 | 5 |
| Cell Type | | LFP ($LiFePO_4$) | | | |
| Cell Configuration | | (20S)2S1P | (20S)3S1P | (20S)4S1P | (20S)5S1P |
| Nominal Voltage (V) | | 128 | 192 | 256 | 320 |
| Operating Voltage Range (V) | | 114.8~144.4 | 172.2~216.6 | 229.6~288.8 | 287~361 |
| Nominal Dis-/Charge Current (A)*2 | | 35 | | | |
| Nominal Power (kW)*2 | | 4.48 | 6.72 | 8.96 | 11.2 |
| Operating Temperature Range (℃) | | Charge: 0~+50; Discharge: -20~+50 | | | |
| Relative Humidity | | 0~95% | | | |
| Max. Operating Altitude (m) | | 3000 | | | |
| Communication | | CAN | | | |
| Weight (kg) | | 86 | 120 | 154 | 188 |
| Dimension (W×H×D mm) | | 600×559×380 | 600×715×380 | 600×871×380 | 600×1027×380 |
| Ingress Protection Rating | | IP55 | | | |
| Storage Temperature (℃) | | -20~+45(≤One Month) ; 0~+35(≤One Year) | | | |
| Mounting Method | | Grounded | | | |
| Round-trip Efficiency | | 94% | | | |
| Cycle Life*3 | | >4000 | | | |
| Standard and Certification | Safety | IEC62619, IEC62040-1, IEC63056, VDE2510, CE , CEC | | | |
| | EMC | CE, RCM | | | |
| | Transportation | UN38.3 | | | |

*1: Test conditions, 100% DOD, 0.2℃ charge & discharge at +25±2 °C for battery system at beginning life. System Usable Energy may vary with different inverter.
*2: Nominal Dis-/Charge Current and power derating will occur related to Temperature and SOC.
*3: Based on 2.5~3.65V voltage rang @25±2℃ of Cell under 0.7C/1C test condition and 80% EOL.

| Technical Parameters | | LX F19.2-H-20 | LX F22.4-H-20 | LX F25.6-H-20 | LX F28.8-H-20 |
|---|---|---|---|---|---|
| Usable Energy (kWh)*1 | | 19.2 | 22.4 | 25.6 | 28.8 |
| Battery Module | | LX F3.2-20: 64V 3.2kWh | | | |
| Number of Modules | | 6 | 7 | 8 | 9 |
| Cell Type | | LFP ($LiFePO_4$) | | | |
| Cell Configuration | | (20S)6S1P | (20S)7S1P | (20S)8S1P | (20S)9S1P |
| Nominal Voltage (V) | | 384 | 448 | 512 | 576 |
| Operating Voltage Range (V) | | 344.4~433.2 | 401.8~505.4 | 459.2~577.6 | 516.6~649.8 |
| Nominal Dis-/Charge Current (A)*2 | | 35 | | | |
| Nominal Power (kW)*2 | | 13.44 | 15.68 | 17.92 | 20.16 |
| Operating Temperature Range (℃) | | Charge: 0~+50; Discharge: -20~+50 | | | |
| Relative Humidity | | 0~95% | | | |
| Max. Operating Altitude (m) | | 3000 | | | |
| Communication | | CAN | | | |
| Weight (kg) | | 222 | 256 | 290 | 324 |
| Dimension (W×H×D mm) | | 600×1183×380 | 600×1339×380 | 600×1495×380 | 600×1651×380 |
| Ingress Protection Rating | | IP55 | | | |
| Storage Temperature (℃) | | -20~+45(≤One Month) ; 0~+35(≤One Year) | | | |
| Mounting Method | | Grounded | | | |
| Round-trip Efficiency | | 94% | | | |
| Cycle Life*3 | | >4000 | | | |
| Standard and Certification | Safety | IEC62619, IEC62040-1, IEC63056, VDE2510, CE, CEC | | | |
| | EMC | CE, RCM | | | |
| | Transportation | UN38.3 | | | |

*1: Test conditions, 100% DOD, 0.2℃ charge & discharge at +25±2 °C for battery system at beginning life. System Usable Energy may vary with different inverter.
*2: Nominal Dis-/Charge Current and power derating will occur related to Temperature and SOC.
*3: Based on 2.5~3.65V voltage rang @25±2℃ of Cell under 0.7C/1C test condition and 80% EOL.

Official
Website

**GoodWe Technologies Co.,Ltd.**

No. 90 Zijin Rd., New District, Suzhou, 215011, China

www.goodwe.com

service@goodwe.com

Contact Information