Operating Instructions

Fronius Reserva

6.3 kWh / 9.5 kWh / 12.6 kWh / 15.8 kWh

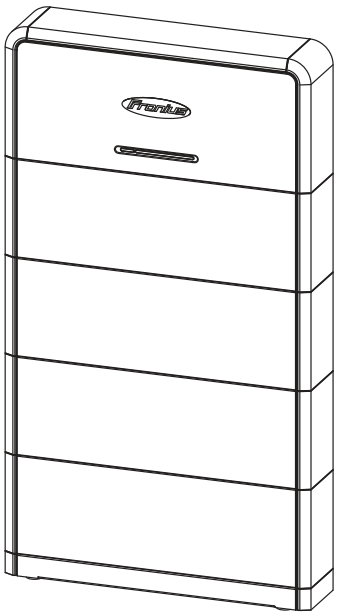

EN-US | Operating instructions

42,0426,0564,EA 010-18092025

Table of contents

General information **5**

Safety information 7
Explanation of warnings and safety instructions 7
Safety instructions and important information 7
Battery hazard 8
Recommended measures in case of emergencies 9
EMC measures 9
Electromagnetic fields 10
Ground conductor 10
General 11
Information on the device 11
How information is presented in the document 12
Target group 13
Data security 13
Copyright 13
Fronius Reserva 15
Device concept 15
Function overview 15
Scope of supply 16
Storage 17
Intended use 17
Foreseeable misuse 18
Different operating modes 19
Operating modes – Explanation of symbols 19
Operating mode – Solar energy 19
Operating mode – Self-consumption optimization 20
Operating mode – Backup power 20
Operating mode – Cost-optimized battery charging from the public grid 20
Energy flow direction of the inverter 21
Operating states (only for battery systems) 21
Operating controls and connections 23
Connection area 23
Operating controls 24
LED status indicators 24

Installation **27**

General 29
System component compatibility 29
Choosing the Location 30
Selecting the battery location 30
Installation 31
Selecting the mounting material 31
Wall installation 31
Structure of the battery 32
Requirements for connection 36
Various cable types 36
Permitted cables for the electrical connection 36
Permitted cables for the data communication connection 36
Electrical connection 37
Safety 37
Disconnecting the photovoltaic system from the power supply 37
Connecting the ground conductor 38
Connecting the DC cables 38
Connecting the DC cables for battery parallel operation 40
Connecting the data communication cables 43
PIN assignment 43
Connecting data communication cables to inverters 43

Connecting the data communication cables for battery parallel operation 44
Terminating resistors 46
Finally 47
Mounting covers on the battery 47
Adding/replacing the Reserva module of the battery system 48
Safety 48
Requirements for expanding the battery system 48
Setting the State of Charge (SoC) with Service Mode 49
Switching off the photovoltaic system and battery 49
Removing covers from the battery 50
Disconnecting and dismantling the Reserva BMS 51
Installing new Reserva module 53
Installing the Reserva BMS 54
Connecting the Reserva BMS 55
Mounting covers on the battery 56

Commissioning **57**

Switching on the photovoltaic system 59
Switching on the photovoltaic system 59
Manual system start 60
Requirements 60
Notification of system shutdown 60
Manual battery start (dark start) after system shutdown 60
Starting backup power mode after system shutdown 60
Settings – User interface of the inverter 61
General 61
Commissioning with the app 61
Commissioning with the browser 61
Adding a battery in the user interface of the inverter 62
Firmware update 62

Appendix **65**

Service, maintenance and disposal 67
Cleaning 67
Maintenance 67
Forced re-charging 67
Disposal 67
Warranty provisions 68
Fronius manufacturer's warranty 68
Technical data 69
Fronius Reserva 69
Explanation of footnotes 70

Dimensions **71**

Fronius Reserva 72

General information

Safety information

Explanation of warnings and safety instructions

The warnings and safety instructions in these instructions are intended to protect people from possible injury and the product from damage.

⚠ DANGER!

Indicates an immediately dangerous situation
Serious injury or death will result if appropriate precautions are not taken.
▶ Action step to escape the situation

⚠ WARNING!

Indicates a potentially dangerous situation
Death or serious injury may result if appropriate precautions are not taken.
▶ Action step to escape the situation

⚠ CAUTION!

Indicates a potentially dangerous situation
Minor or moderate injury may result if appropriate precautions are not taken.
▶ Action step to escape the situation

NOTE!

Indicates impaired work results and/or damage to the device and components

The warnings and safety instructions are an integral part of these instructions and must always be observed to ensure the safe and proper use of the product.

Safety instructions and important information

The device has been manufactured in line with the state of the art and according to recognized safety standards.

⚠ WARNING!

Incorrect operation or misuse
Serious to fatal injuries to the operator or third parties as well as damage to the device and other property of the operator may result.
▶ All persons involved in the commissioning, maintenance, and servicing of the device must be appropriately qualified and have knowledge of working with electrical installations.
▶ Read these operating instructions in full and follow them carefully and precisely.
▶ The operating instructions must always be kept to hand wherever the device is being used.

IMPORTANT!
In addition to the operating instructions, all applicable local rules and regulations regarding accident prevention and environmental protection must also be followed.

IMPORTANT!
Labels, warning notices, and safety symbols are located on the device. A description can be found in these operating instructions.

IMPORTANT!

All safety and danger notices on the device:
- Must be kept in a legible state
- Must not be damaged/marked
- Must not be removed
- Must not be covered, have anything stuck on them, or painted over

⚠ WARNING!

Tampered-with and non-functioning protection devices
Serious to fatal injuries as well as damage to the device and other property of the operator may result.
▶ Never bypass or disable protection devices.
▶ Any protection devices that are not fully functional must be repaired by an authorized specialist before the device is switched on.

⚠ WARNING!

Loose, damaged, or under-dimensioned cables
An electric shock can be fatal.
▶ Use undamaged, insulated, and adequately dimensioned cables.
▶ Fasten the cables according to the specifications in the operating instructions.
▶ Loose, damaged, or under-dimensioned cables must be repaired or replaced immediately by an authorized specialist.

NOTE!

Installations or modifications to the device
The device may be damaged
▶ Do not carry out any alterations, installations, or modifications to the device without first obtaining the manufacturer's permission.
▶ Damaged components must be replaced.
▶ Only use original spare parts.

Battery hazard

Electrolyte leakage
- Do not expose the battery to strong shocks/vibrations.
- Do not deform or pierce the battery.
- Do not open or damage the battery.
- Creation of an explosive atmosphere.

Fire
- Short circuits at voltage-carrying parts of the battery, e.g., connection terminals.
- Do not expose the battery to direct sunlight.
- Keep the battery away from fire sources as well as flammable, explosive, and chemical materials.
- Do not place the battery into a fire.

Electric shock
- Contact with live parts such as connection terminals.
- Do not touch the battery with wet hands.
- Keep the battery out of reach of children and animals.
- A battery may pose a risk of electric shock and burns due to a high short circuit current.
- Risk of electric shock from batteries that are submerged in water.

Damage
- Do not immerse the battery in water.
- Risk of mechanical deformation due to load from foreign bodies.
- Do not step on or apply a load to the battery.

Recommended measures in case of emergencies

Electrolyte leakage
- Initiate rescue measures, alert and instruct emergency services.
- Contact with skin: Wash thoroughly with soap and water.
- Contact with eyes: Rinse eyes under clear running water for 15 minutes.
- Contact with respiratory tract: Leave the contaminated area immediately and ensure a supply of fresh air.
- If swallowed, do not induce vomiting. Vomiting can cause severe burns in the mouth, esophagus, and gastrointestinal tract.
- Immediately seek medical assistance after first aid measures have been taken.
- Only remove/dispose of leaked electrolyte with suitable protective equipment in accordance with the applicable specifications and guidelines.
- Supply the danger area with sufficient fresh air.

Fire
Battery can ignite if heated above 150°C. The following measures must be taken if this occurs:
- Initiate rescue measures, alert and instruct emergency services.
- If the battery catches fire during operation, switch off the DC disconnector of the battery, unless there is a direct danger.
- Use a fire extinguisher in accordance with the applicable national regulations.

Electric shock
- Initiate rescue measures, alert and instruct emergency services.
- Disconnect the PV system and battery from the power supply, provided there is no immediate danger.
- Do not touch the battery if it is wet or submerged in water. Leave the danger zone immediately, alert the emergency services if there is water damage to the battery and contact customer service or the distributor for technical assistance.
- Battery installation and cable connections must be carried out by qualified specialists.

Damage
- Damaged batteries are dangerous and must be handled with extreme caution. They must not be used and may pose a danger to people and/or property. If the battery is damaged, immediately switch off the battery's DC disconnector, contact the distributor to arrange repair or return.

EMC measures

In certain cases, even though a device complies with the standard limit values for emissions, it may affect the application area for which it was designed (e.g., when there is equipment that is susceptible to interference at the same location or if the site where the device is installed is close to either radio or television receiv-

ers). If this is the case, the operator is obliged to take action to rectify the situation.

Electromagnetic fields

During operation, due to the high electrical voltages and currents, local electromagnetic fields (EMF) occur in the environment around the inverter and the Fronius system components as well as in the area of the PV modules including the supply lines.

In the case of exposure to humans, the required limit values are observed when the products are used in line with the intended use and the recommended distance of at least 20 cm is observed.

If these limit values are complied with, according to current scientific knowledge, no health-endangering effects from EMF exposure are to be expected. If wearers of prostheses (implants, metal parts in and on the body) as well as active physical aids (pacemakers, insulin pumps, hearing aids, etc.) are in the vicinity of components of the PV system, they must consult with the responsible doctor regarding possible health risks.

Ground conductor

Connection of a point in the device, system, or installation to ground to protect against electric shock in the event of a fault. When installing an inverter from safety class 1 (see Technical data), a ground conductor connection is required.

When connecting the ground conductor, ensure that it is secured to prevent unintentional disconnection. All of the points listed in the chapter headed Electrical connection on page 37 must be observed. When using cable glands, ensure that the ground conductor is last to be subjected to a load in the event of a failure of the cable gland. The respective national standards and regulations and requirements for minimum cross-section must be observed when connecting the ground conductor.

General

Information on the device

IMPORTANT!
Technical data, labels, warning notices, and safety symbols are affixed to the battery. This information must be kept in a legible condition and must not be removed, covered, pasted over, or painted over. The notices and symbols warn against incorrect operation, which may result in serious injury and property damage.

Rating plate

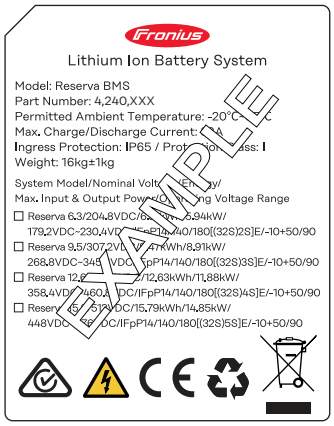

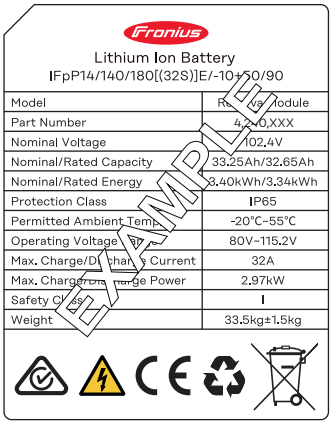

Explanation of symbols – Rating plate	
	RCM marking – tested according to the requirements of Australia and New Zealand.
	Warning: Electric voltage
	CE label – confirms compliance with applicable EU directives and regulations.
	Recyclable – the product is recyclable or made from recycled materials.
	WEEE marking – waste electrical and electronic equipment must be collected separately and recycled in an environmentally sound manner in accordance with the European Directive and national law.
	Separate collection – Battery Regulation 2023/1542/EU – Batteries must be collected separately in accordance with the EU regulation and handed over to waste management for environmentally sound disposal or recycling.

Battery code	Description
IFpP	Type of battery (e.g., lithium iron phosphate)
14/140/180	Battery dimensions [mm]
(32S)nS	Number of cells in series (32 cells in series)

Warning notice

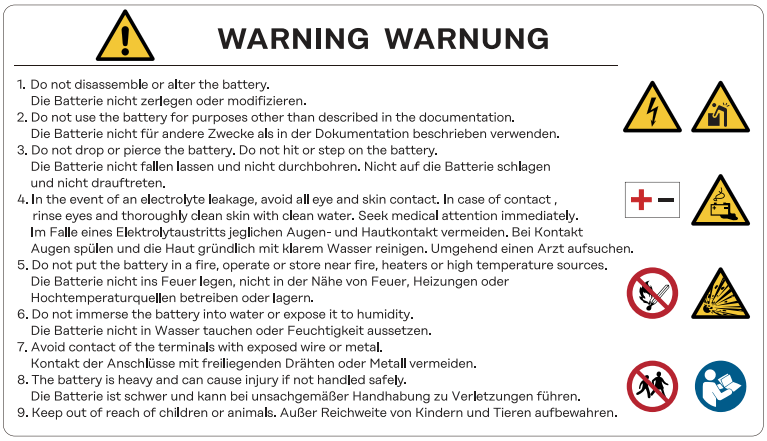

WARNING WARNUNG

1. Do not disassemble or alter the battery.
   Die Batterie nicht zerlegen oder modifizieren.
2. Do not use the battery for purposes other than described in the documentation.
   Die Batterie nicht für andere Zwecke als in der Dokumentation beschrieben verwenden.
3. Do not drop or pierce the battery. Do not hit or step on the battery.
   Die Batterie nicht fallen lassen und nicht durchbohren. Nicht auf die Batterie schlagen und nicht drauftreten.
4. In the event of an electrolyte leakage, avoid all eye and skin contact. In case of contact , rinse eyes and thoroughly clean skin with clean water. Seek medical attention immediately.
   Im Falle eines Elektrolytaustritts jeglichen Augen- und Hautkontakt vermeiden. Bei Kontakt Augen spülen und die Haut gründlich mit klarem Wasser reinigen. Umgehend einen Arzt aufsuchen.
5. Do not put the battery in a fire, operate or store near fire, heaters or high temperature sources.
   Die Batterie nicht ins Feuer legen, nicht in der Nähe von Feuer, Heizungen oder Hochtemperaturquellen betreiben oder lagern.
6. Do not immerse the battery into water or expose it to humidity.
   Die Batterie nicht in Wasser tauchen oder Feuchtigkeit aussetzen.
7. Avoid contact of the terminals with exposed wire or metal.
   Kontakt der Anschlüsse mit freiliegenden Drähten oder Metall vermeiden.
8. The battery is heavy and can cause injury if not handled safely.
   Die Batterie ist schwer und kann bei unsachgemäßer Handhabung zu Verletzungen führen.
9. Keep out of reach of children or animals. Außer Reichweite von Kindern und Tieren aufbewahren.

Explanation of symbols – Warning notice	
	General Warning Sign
	Warning: Electric voltage
	Warning: Heavy load
	Do not reverse polarities
	Warning: Hazards due to the charging of batteries
	No open flame; fire, open source of ignition, and smoking prohibited
	Warning: Explosive substances
	Keep out of reach of children and animals
	Follow the operating instructions

How information is presented in the document

The conventions regarding how information is presented in the document, which are set out below, have been defined in order to increase the readability and comprehensibility of the document.

Application notes

IMPORTANT! Indicates application notes and other useful information. It does not indicate a harmful or dangerous situation.

Software

Software functions and elements of a graphical user interface (e.g., buttons, menu items) are highlighted in the text with this **mark up**.

Example: Click **Save**.

Instructions for action

1 Action steps are displayed with consecutive numbering.

✓ *This symbol indicates the result of the action step or the entire instruction.*

Target group

This document provides detailed information and instructions to ensure that all users can use the device safely and efficiently.

- The information is intended for the following groups of people:
  - **Technical specialists:** People with appropriate qualifications and fundamental electronic and mechanical knowledge, who are responsible for the installation, operation, and maintenance of the device.
  - **End users:** People that use the device in daily operation and want to understand its basic functions.
- Regardless of any qualifications, only perform the activities listed in this document.
- All persons involved in the commissioning, maintenance, and servicing of the device must be appropriately qualified and have knowledge of working with electrical installations.
- The definition of professional qualifications and their applicability are subject to national law.

Data security

With regard to data security, the user is responsible for:

- Backing up any changes made to the factory settings
- Saving and storing personal settings

NOTE!

Data security for network and Internet connection

Unsecured networks and a lack of safeguards can result in data loss and unauthorized access. Observe the following points for safe operation:

▶ Operate inverters and system components on a private, secure network.

▶ Keep the network devices (e.g., WiFi routers) up to date with the latest technology.

▶ Keep the software and/or firmware updated.

▶ Use a wired network to ensure a stable data connection.

▶ For security reasons, do not make inverters and system components accessible from the Internet via port forwarding or Port Address Translation (PAT).

▶ Use the solutions provided by Fronius for monitoring and remote configuration.

▶ The optional communication protocol Modbus TCP/IP[1)] is an unsecured interface. Only use Modbus TCP/IP if no other secured data communication protocol (MQTT[2)]) is possible (e.g., compatibility with older Smart Meters).

[1)] TCP/IP - Transmission Control Protocol/Internet Protocol

[2)] MQTT - Message Queuing Telemetry Protocol

Copyright

Copyright of these operating instructions remains with the manufacturer.

Text and illustrations were accurate at the time of printing, subject to change.
We are grateful for suggestions for improvement and information on any discrepancies in the operating instructions.

Fronius Reserva

Device concept

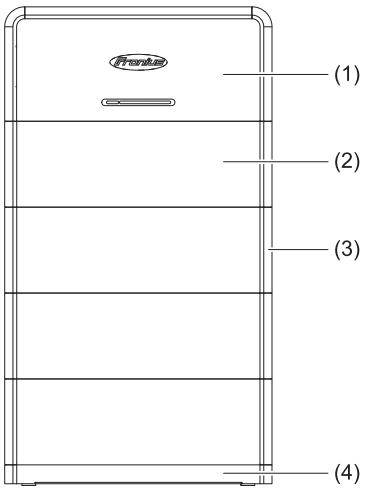

(1) Battery Management Module (BMS)
(2) Battery module
(3) Cover
(4) Base plate

The Fronius Reserva battery is a stackable battery system. Up to a maximum of 4 battery systems can be operated in parallel operation. Lithium iron phosphate (LFP) batteries are known for their high thermal and chemical stability. The multi-level safety design as well as intelligent safety monitoring systems ensure safe operation throughout the total life cycle.

The Fronius Reserva can be used for backup power supply in combination with an backup power-capable Fronius inverter and backup power switching with the appropriate configuration.

Function overview

Function	Description
SoC calculation	The current state of charge (SoC) is calculated and displayed on the LED status indicator. To ensure that the SoC calculation for the battery system is accurate, an SoC calibration is carried out every 2 months or 50 charging cycles.
Safety	The battery monitors and protects itself against faulty operation in the event of: - overvoltage and undervoltage - overcurrent - overtemperature and undertemperature - cell and hardware errors
Dark start	The battery provides energy for manual system start (dark start) and the inverter automatically starts the backup power mode.
Update	The battery firmware is updated via the user interface of the inverter.
Capacity	2 - 5 Reserva modules per battery system and max. 4 battery systems in parallel operation.
Monitoring	Operating data and status indicators are transmitted to the inverter for monitoring via the RS485 interface.

Scope of supply

Reserva module

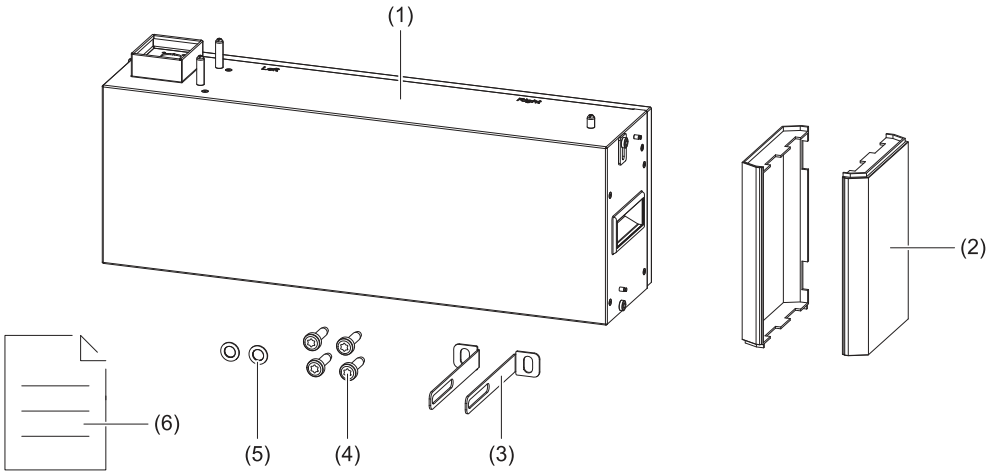

No.	Designation	Quantity
(1)	Battery module	1
(2)	Cover	2
(3)	L-shaped mounting bracket	2
(4)	M6x12 TX 30 screw	4
(5)	M6 washer	2
(6)	Quick Start Guide	1

Reserva BMS

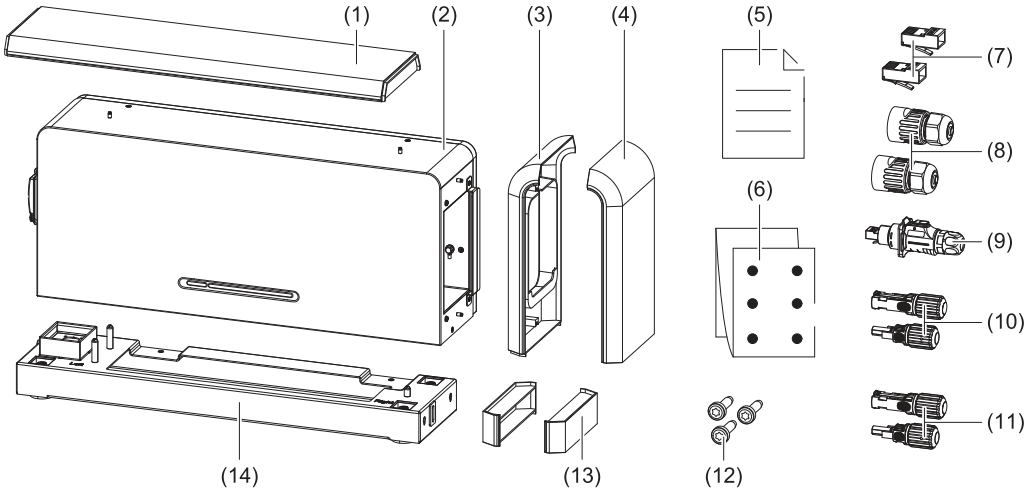

No.	Designation	Quantity
(1)	Cover (top)	1
(2)	Battery Management System (BMS)	1
(3)	Cover (left)	1
(4)	Cover (right)	1
(5)	Quick Start Guide	1
(6)	Drilling template	1

No.	Designation	Quantity
(7)	RJ45 plug	2
(8)	RJ45 screw connection (battery parallel operation)	2
(9)	LP-16-C/RJ45 plug (battery to inverter)	1
(10)	Stäubli MC4 EVO STO 6 mm^2 (+/-)	2
(11)*	Stäubli MC4 EVO STO 10 mm^2 (+/-)	2
(12)	M6x12 TX 30 screw	3
(13)	Covers for the base plate	2
(14)	Base plate	1

* Only included in the scope of supply for Australia and New Zealand.

Storage

Max. storage period	Temperature range	Relative humidity	SoC*
7 days	-30 to -20 °C 45 to 60 °C	5% - 95%	30%
12 months	-20 to 45 °C	5% - 95%	30%
* SoC at the time of storage.			

The following storage conditions must be observed for batteries that are not used for **more than 7 days**:
- Store according to the instructions on the packaging and do not turn upside down.
- Store in a place that is protected from direct sunlight and rain.
- Keep at least 2 meters away from heat sources (e.g., radiators).
- Avoid contact with corrosive and organic substances (including gas).
- Defective batteries must be stored separately from intact batteries (e.g., through physical separation or different fire protection zones).
- The storage area should be dry, clean, and well ventilated.

For batteries that are not used **for more than 12 months**, the following measure is necessary:
- Batteries must be recharged by the manufacturer. For this purpose, the batteries must be sent to the manufacturer.

Intended use

The Fronius Reserva battery is intended for storing electrical energy from photovoltaic systems. It is used to store surplus energy and release it again if necessary in order to optimize the energy supply and maximize the self-consumption of solar energy. The battery is designed for use in private households and for small to medium-sized commercial applications.

The Fronius Reserva can be used for backup power supply in combination with an backup power-capable Fronius inverter and backup power switching devices.

Foreseeable misuse

The following circumstances are considered to be reasonably foreseeable misuse:

- Use other than or in excess of the intended use.
- The use of incompatible chargers.
- Improper handling, such as dropping or exposing to strong vibrations.
- Backup power mode without suitable switching devices.
- Any modification or manipulation of the battery system that is not expressly recommended by Fronius.
- The supply of loads that require an uninterrupted supply (e.g., IT networks, life-sustaining medical devices).

Different operating modes

Operating modes – Explanation of symbols

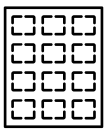

PV module
generates direct current

Fronius hybrid inverter
converts direct current into alternating current and charges the battery (battery charging requires battery support).

Battery
is coupled to the inverter on the direct current side and stores electrical energy.

Primary meter
records the load curve of the system and makes the measured data available for energy profiling in Fronius Solar.web. The primary meter also controls the dynamic power of feeding in.

Loads in the system
are the loads connected in the system.

Grid
supplies the loads in the system if insufficient power is being generated by the PV modules or supplied by the battery.

Operating mode – Solar energy

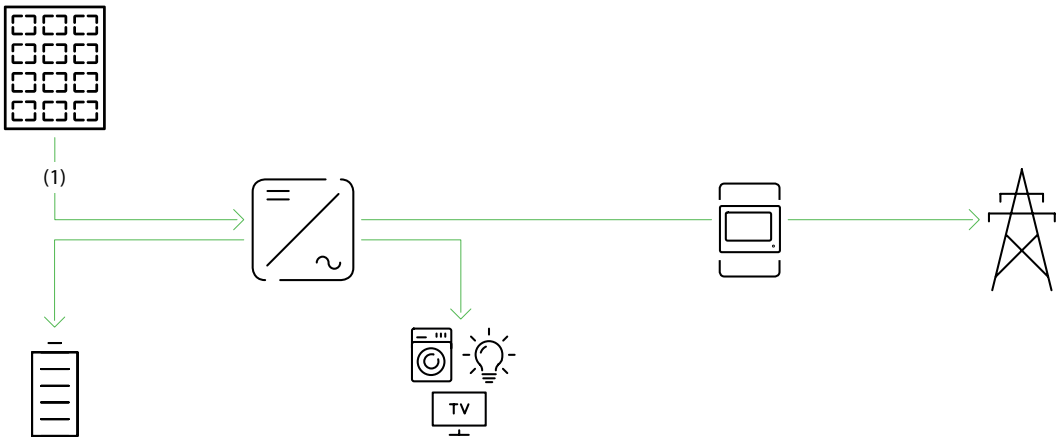

(1) The solar energy generated supplies the loads in the house, the battery is charged with solar energy and the surplus energy production is fed into the public grid.

Operating mode – Self-consumption optimization

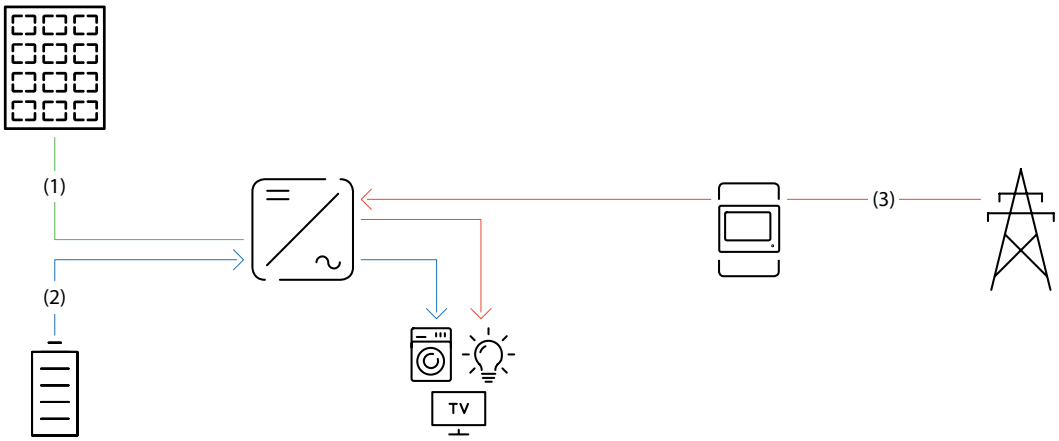

(1) There is no solar energy available from the PV modules.
(2) The loads in the house are supplied with energy from the battery.
(3) The loads in the house are supplied with energy from the public grid if the energy from the battery is insufficient.

Operating mode – Backup power

IMPORTANT!
Appropriate installation and configuration is a prerequisite for the backup power operating mode.

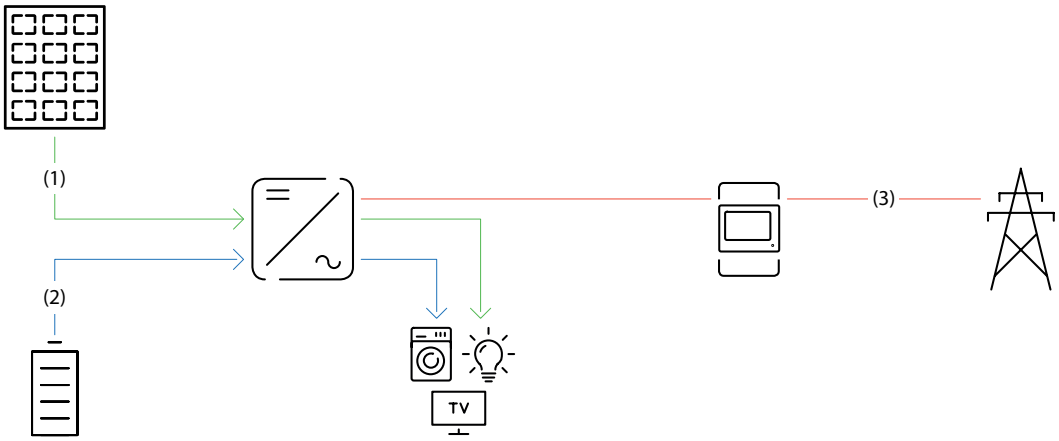

(1) The loads in the house are supplied with solar energy from the PV modules.
(2) The loads in the house are supplied with energy from the battery if the solar energy from the PV modules is insufficient.
(3) There is no energy available from the public grid.

Operating mode – Cost-optimized battery charging from the public grid

Requirements
- Flexible electricity tariff
- The “Energy Cost Assistant” function in Fronius Solar.web must be activated.
- The restrictions of the grid operator must be taken into account.

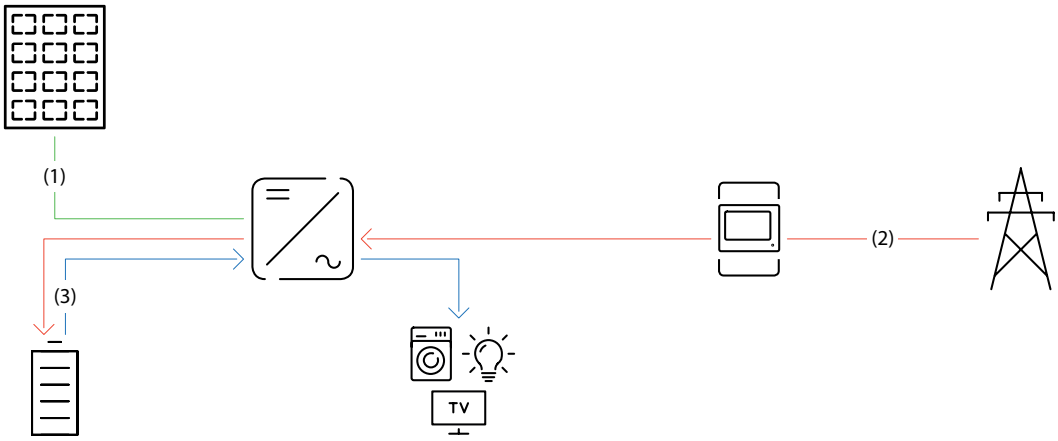

(1) There is no solar energy available from the PV modules.
(2) The battery is charged using energy from the public grid at a low electricity price.
(3) The loads in the house are supplied with energy from the battery.

Energy flow direction of the inverter

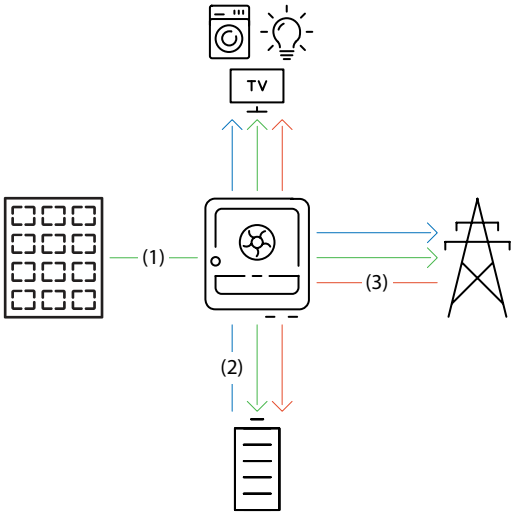

(1) PV module – inverter – load/grid/battery
(2) Battery – inverter – load/grid*
(3) Grid – inverter – load/battery*

* Charging the battery from the public grid depends on the settings and local standards and regulations.

Operating states (only for battery systems)

Battery systems distinguish between different operating states. In each case, the relevant current operating state is displayed on the user interface of the inverter or in Fronius Solar.web.

Operating state	Description
Normal operation	The energy is stored or drawn, as required.
Min. state of charge (SoC) reached	The battery has reached the minimum SoC specified by the manufacturer or the set minimum SoC. The battery cannot be discharged further.
Energy saving mode (standby)	The system has been put into energy-saving mode. Energy saving mode is automatically ended as soon as sufficient surplus power is available again.

Operating state	Description
Start	The battery system starts from energy-saving mode (standby).
Forced re-charging	The inverter recharges the battery, in order to maintain the SoC specified by the manufacturer or the set minimum SoC (protection against deep discharge).
Calibration charging	The battery system is charged to the SoC of 100% and then discharged to the SoC of 0%. After 1 hour of waiting time at SoC 0%, the calibration charge is stopped and the battery switches to normal operation.
Service mode	The battery system is charged or discharged to the SoC of 30% and the SoC of 30% is maintained until the end of the service mode.
Deactivated	The battery is not active. It has either been deactivated, switched off, or the communication between the battery and the inverter has been interrupted.

Operating controls and connections

Connection area

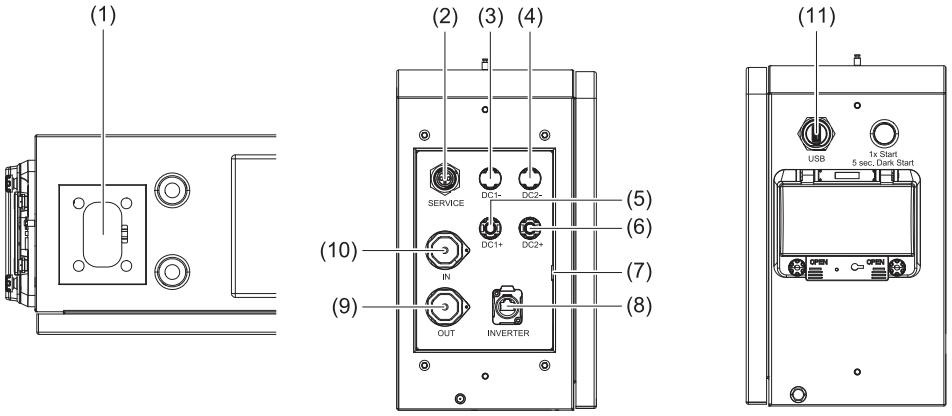

No.	Name	Description
(1)	HVB connector	High-voltage battery (HVB) and data communication connector
(2)	SERVICE	12 V external activation signal connection
(3)	DC1-	Negative pole for DC connection to inverter or battery in parallel operation
(4)	DC2-	Negative pole for DC connection to inverter or battery in parallel operation
(5)	DC1+	Positive pole for DC connection to inverter or battery in parallel operation
(6)	DC2+	Positive pole for DC connection to inverter or battery in parallel operation
(7)	⏚	PE ground conductor connection
(8)	INVERTER	Data communication connection to the inverter
(9)	OUT	Data communication output between batteries in parallel operation
(10)	IN	Data communication input between batteries in parallel operation
(11)	USB	For external data exchange (e.g., firmware update)

Operating controls

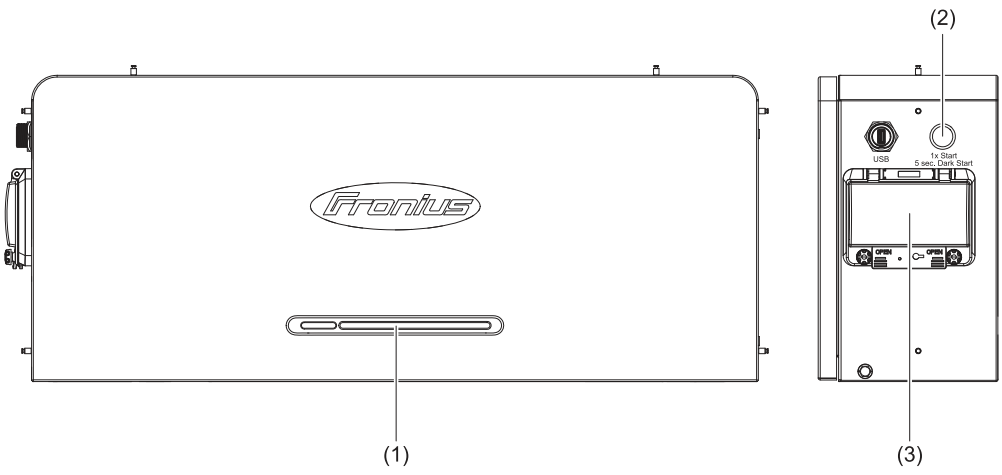

No.	Name	Description
(1)	LED status indicators	Displays the status of the battery
(2)	Start button/dark start	- Press once to start the battery - Press and hold for 5 seconds for manual battery start (dark start) after system shutdown
(3)	DC Disconnector	Interrupts the current flow between the battery and the inverter

LED status indicators

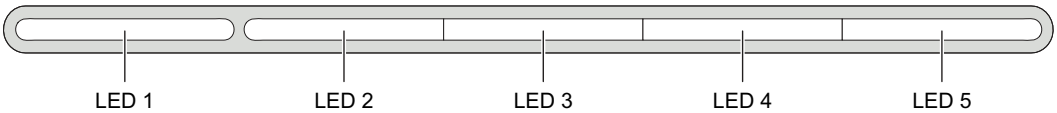

Status	Description	LED status				
		LED 1	LED 2	LED 3	LED 4	LED 5
Starting procedure	The number of the battery system is checked and started	●●	●●	●●	●●	●●
Start	Primary battery	▬	●●	●●	●●	●●
	Secondary battery 1	▬	-	-	-	●●
	Secondary battery 2	▬	-	-	●●	-
	Secondary battery 3	▬	-	-	●●	●●
Checking the application mode	Successful parallel or single application mode verification	5 x ●●	State of Charge (SoC) is displayed			
	Establishing a connection for parallel operation	●	State of Charge (SoC) is displayed			

Status	Description	LED status				
Charging (SoC)	0% - 25.0%	▬	●	-	-	-
	25.1% - 50.0%	▬	●	●	-	-
	50.1% - 75.0%	▬	●	●	●	-
	75.1% - 99.9%	▬	●	●	●	●
	100%	▬	▬	▬	▬	▬
Discharging / no load	100% - 75.1%	▬	▬	▬	▬	▬
	75.0% - 50.1%	▬	▬	▬	▬	-
	50.0% - 25.1%	▬	▬	▬	-	-
	25.0% - 0%	▬	▬	-	-	-
Error	There is an error; please contact the technical specialist.	▬	*	*	*	*

● Flashes green 1/s

●● Flashes green 2/s

▬ Lights up green

▬ Lights up red

* The LED status varies depending on the error.

Installation

General

System component compatibility

All installed components in the PV system must be compatible with each other and have the necessary configuration options. The installed components must not restrict or negatively affect the functioning of the PV system.

NOTE!

Risk due to components in the PV system that are not and/or only partially compatible.
Incompatible components can restrict and/or negatively affect the operation and/or functioning of the PV system.

- ▶ Only install components recommended by the manufacturer in the PV system.
- ▶ Before installation, check the compatibility of components that have not been expressly recommended with the manufacturer.

Choosing the Location

Selecting the battery location

IMPORTANT!
The installation location must be selected so that all operating elements are easily accessible and easy to operate. The battery must not be covered or installed in housings.

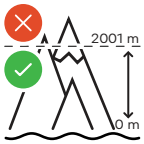	The battery must not be installed or operated at more than 2,000 m above sea level.
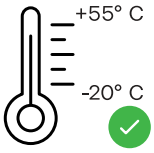	Max. ambient temperature range: -20 °C to +55 °C
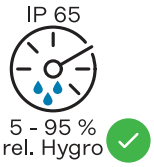	Relative humidity: 5 to 95%
	The battery is suitable for indoor installation.
	The battery is suitable for protected outdoor areas (e.g., under a roof overhang).
	In order to keep battery heating as low as possible, do not expose the battery to direct sunlight.
 	The battery is not suitable for unprotected outdoor installation. Due to the IP 65 protection rating, the battery is dust-tight and protected against water jets from all directions. The battery is not fully waterproof and must not be submerged in water.
	Do not mount the battery near fire sources, or flammable, explosive, and chemical materials.

Installation

Selecting the mounting material

Use appropriate mounting materials depending on the surface and pay attention to the recommendation for the screw dimensions for the L-shaped mounting bracket. The technical specialist is responsible for selecting the proper mounting materials.

Wall installation

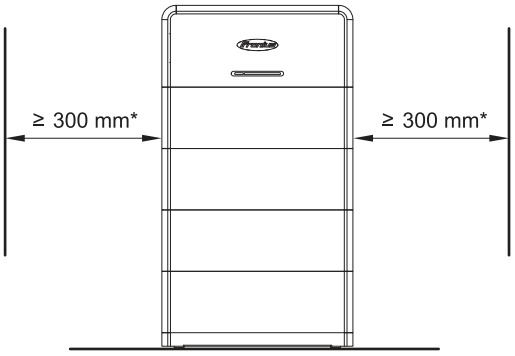

* In Australia, all objects that are not part of the PV system must be at least 600 mm away from the battery.

A minimum distance of 300 mm is recommended on the left and right side of the battery.

For detailed information on the dimensions of the battery, see chapter Dimensions on page71.

IMPORTANT!
The battery system must be mounted on a sufficiently load-bearing and non-flammable surface (e.g., brick or concrete wall). Make sure there are sufficient fastening points, as described below. These depend on the number of Reserva modules used.

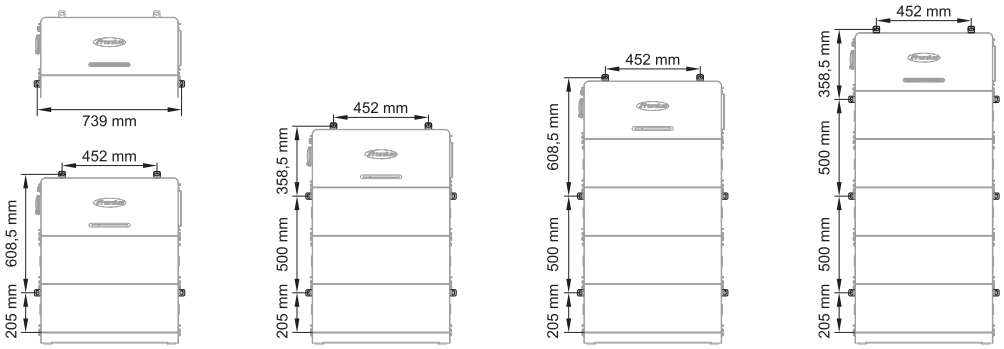

1

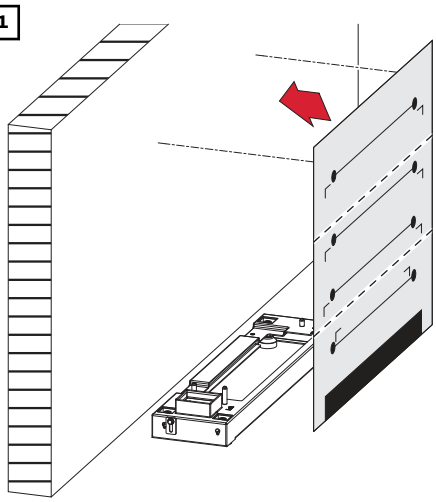

Align the drilling template horizontally on the wall and stick it on.

2

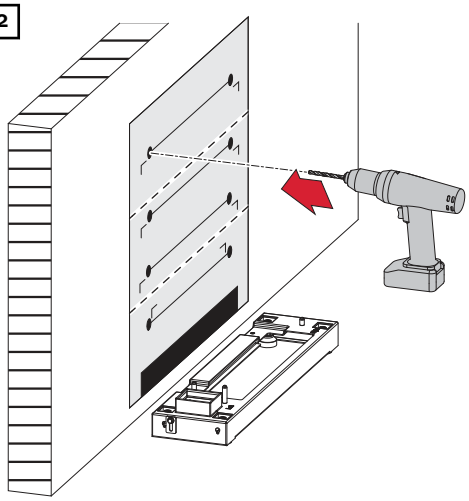

Drill holes at the required fastening points.

3

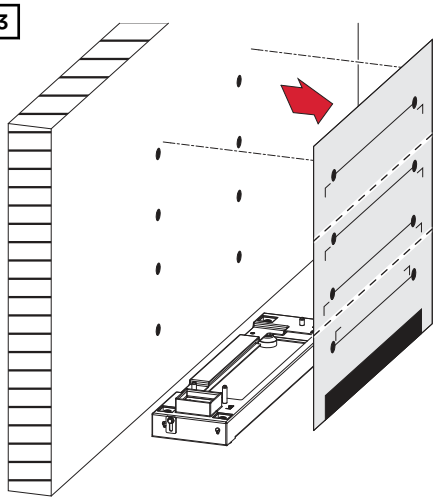

Carefully loosen the drilling template from the wall.

Structure of the battery

WARNING!

Danger of electric shock due to live HVB connectors.
This can result in serious injury and damage to property.

- ▶ Use the integrated handles for lifting and lowering.
- ▶ Wear personal protective equipment.
- ▶ Take off conductive objects, such as watches, bracelets, and rings.

⚠ WARNING!

Danger due to contaminated battery connections.
This can result in serious injury and damage to property.

- ▶ Protect battery connections from soiling.
- ▶ Check the battery connections for contamination.
- ▶ Wear personal protective equipment (insulated gloves, safety goggles, protective clothing) and a lint-free cloth to clean contaminated battery connections; do not use cleaning agents.

⚠ CAUTION!

Danger due to improper handling during transport or installation of the battery.
This can result in injuries.

- ▶ Use the integrated handles for lifting and lowering.
- ▶ When lowering the battery, ensure that no limbs are located between the attachment and the battery.
- ▶ Wear personal protective equipment.
- ▶ Make sure that there are sufficient fastening points to prevent the battery from tipping over.

1

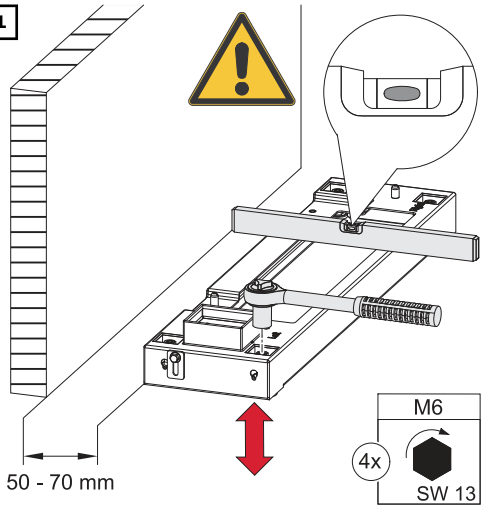

Position the base plate parallel to the wall at a distance of 50 - 70 mm and align it horizontally by turning the adjusting feet with a socket wrench (width across flats 13).

2

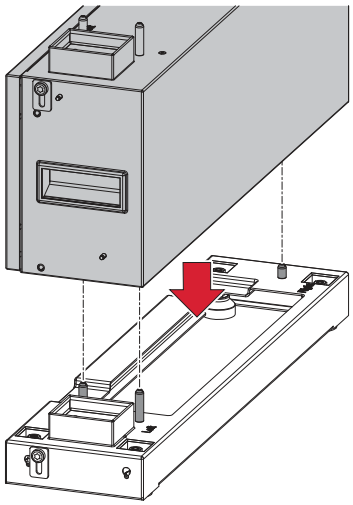

Place the Reserva module parallel to the base plate.

3

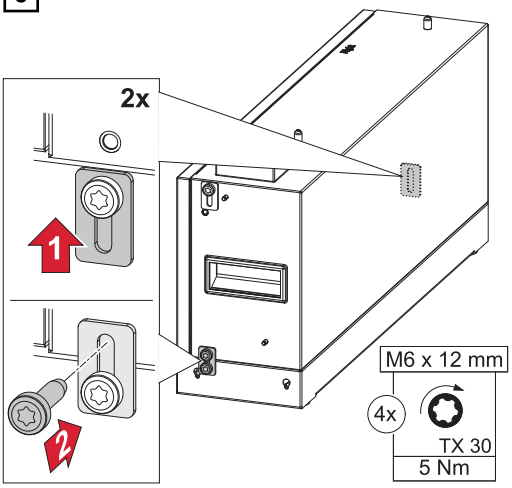

Fasten the 2 connecting tabs using the screws supplied (TX30) and to a torque of 5 Nm.

4

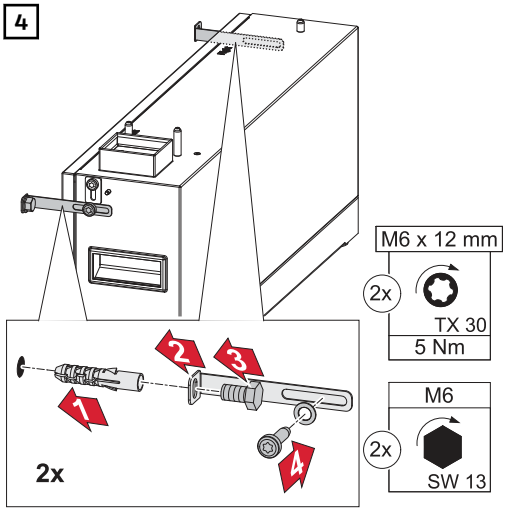

Fasten the L-shaped mounting brackets using the supplied screws (TX30), washers and to a torque of 5 Nm. Insert the bolt anchors into the wall and fasten with a socket wrench (width across flats 13).

5

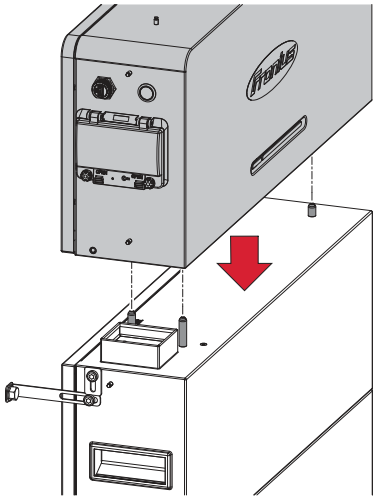

Place the Reserva BMS parallel to the previous Reserva module.

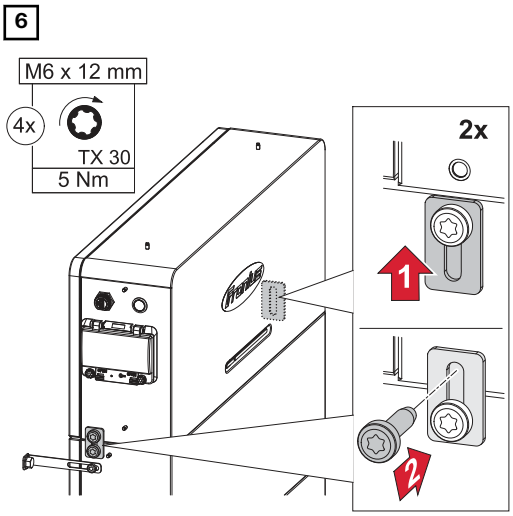

Fasten the 2 connecting tabs using the screws supplied (TX30) and to a torque of 5 Nm.

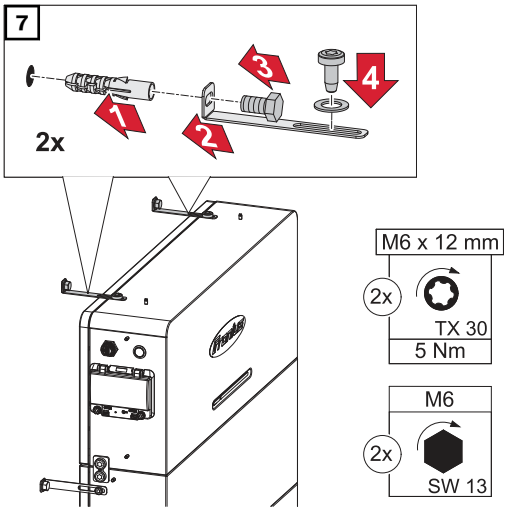

Fasten the L-shaped mounting brackets using the supplied screws (TX30), washers and to a torque of 5 Nm. Insert the bolt anchors into the wall and fasten with a socket wrench (width across flats 13).

Requirements for connection

Various cable types

Solid	Multi-stranded	Fine-stranded
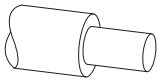	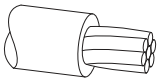	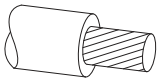

Permitted cables for the electrical connection

IMPORTANT!
The cables used must comply with the applicable national standards and guidelines.

Round copper conductors can be connected to the terminals as described below.

DC connections				
Manufacturer	Ø insulation layer	Stripping length	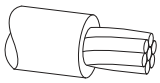	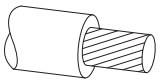
Stäubli MC4 EVO STO 6 mm^2	4.7-6.4 mm	7 mm	6 mm^2	6 mm^2
Stäubli MC4 EVO STO 10 mm^2	6.4-8.5 mm	7 mm	10 mm^2	10 mm^2

Ground conductor connection (ring cable lug)					
Material	Hole Ø	Torque	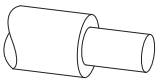	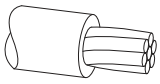	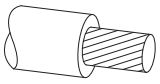
Copper with tin coating	6 mm	5 Nm	10 mm^2	10 mm^2	10 mm^2

Permitted cables for the data communication connection

RJ45 connection			
Cable recom-mendation	Max. cable length	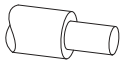	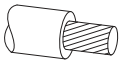
Min. CAT 5 STP (shielded twisted pair)	30 m	0.14 - 1.5 mm^2	0.14 - 1.5 mm^2

Electrical connection

Safety

⚠ WARNING!

Danger due to incorrect operation and incorrectly performed work.
This can result in serious injury and damage to property.
- ▶ Only a technical specialist is permitted to perform commissioning, maintenance, and service activities for inverters and batteries, and only within the scope of the technical regulations.
- ▶ Read the installation instructions and operating instructions from the respective manufacturer before installing and commissioning the equipment.

⚠ WARNING!

Danger from mains voltage and DC voltage from the PV module that are exposed to light, as well as batteries.
This can result in serious injury and damage to property.
- ▶ All connection, maintenance, and service work should only be carried out when the AC and DC sides have been disconnected from the inverter and battery, and are de-energized.
- ▶ Only a technical specialist is permitted to connect this equipment to the public grid.

⚠ WARNING!

Danger from damaged and/or contaminated terminals.
This can result in serious injury and damage to property.
- ▶ Prior to connection work, check the terminals for damage and contamination.
- ▶ Remove any contamination while the equipment is de-energized.
- ▶ Have defective terminals repaired by a technical specialist.

Disconnecting the photovoltaic system from the power supply

1

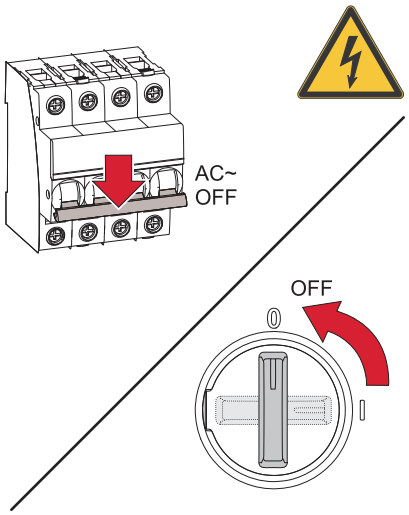

Turn off the automatic circuit breaker.
Set the DC disconnector of the inverter to the “Off” switch position.

IMPORTANT!
Wait for the capacitors of the inverter to discharge!

Connecting the ground conductor

IMPORTANT!
The battery ground conductor must be connected externally (e.g., switch cabinet). The technical specialist is responsible for selecting the ring cable lug and the screw lock.

1

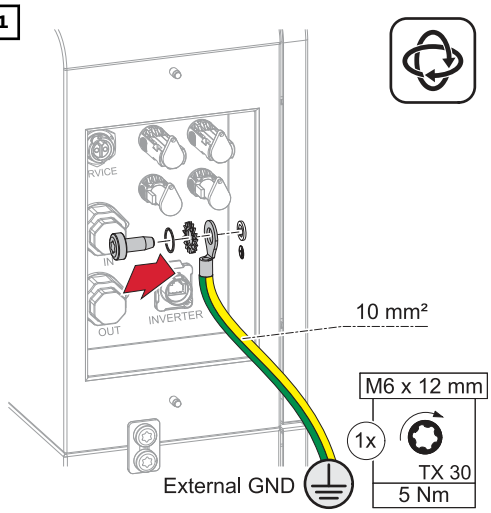

Fasten the ground conductor (PE) to the ground conductor connection using the screws supplied (TX30) and to a torque of 5 Nm.

Connecting the DC cables

WARNING!

Danger due to loose and/or incorrectly clamped single conductors.
This can result in serious injury and damage to property.
- ▶ Check that the single conductors are secure in the crimp contact.
- ▶ Make sure that the single conductor has been fully inserted into the crimp contact and that no single strands are protruding out of it.

IMPORTANT!
The maximum cable length between the inverter and the battery is 30 m.

1

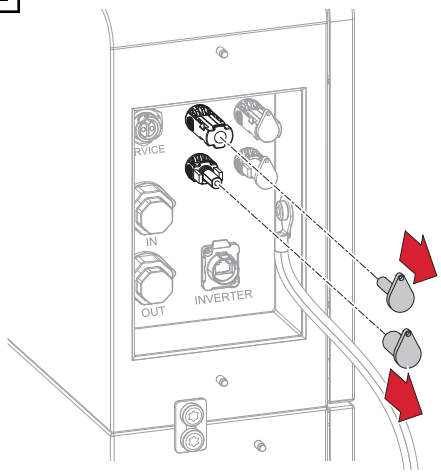

Remove the caps.

2

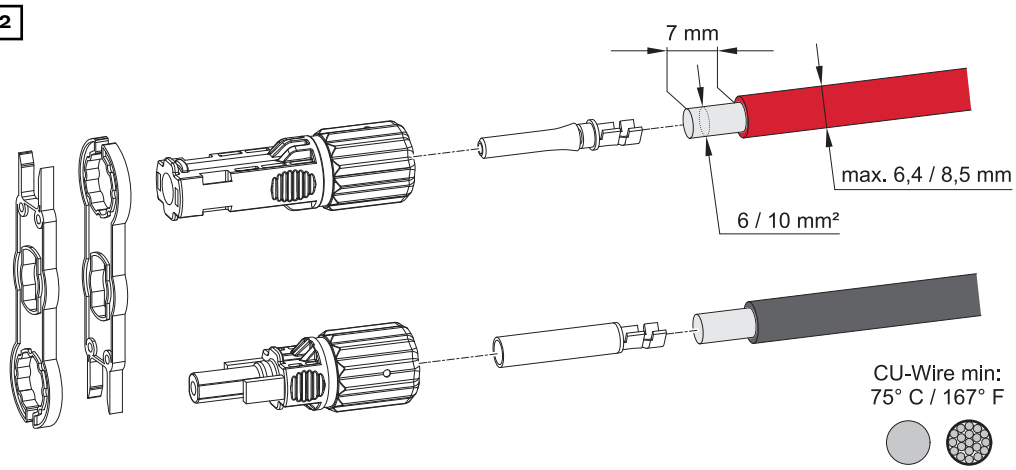

Select the cable cross-section in accordance with the instructions in Permitted cables for the electrical connection on page 36. Strip the insulation of the single conductors by 7 mm (0.27 inch).

3

Disassemble the MC4 plugs.

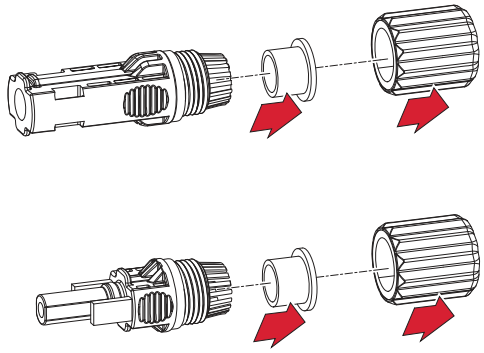

4

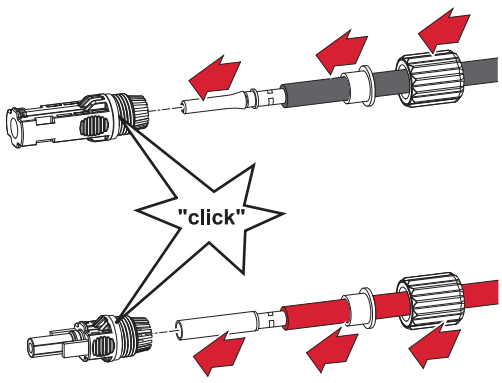

Guide the DC cable through the cable gland and the sealing ring. Crimp the crimp contact onto the stripped DC cable using a suitable crimping tool. Push the crimp contact into the MC4 plug until there is an audible click.

5

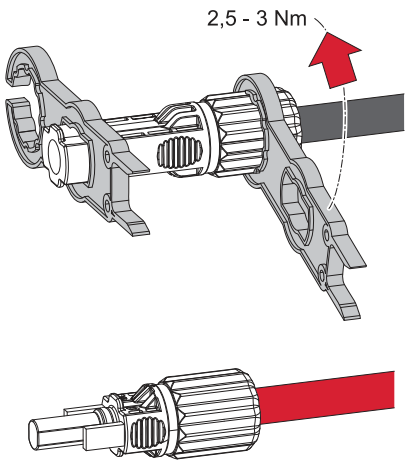

Tighten the cable gland to a torque of 2.5 Nm - 3 Nm.

6

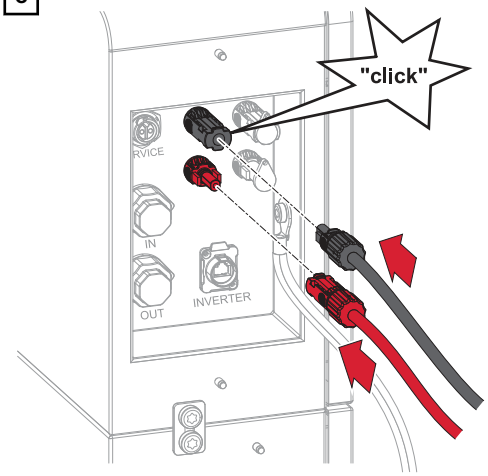

Insert the MC4 plugs (+/-) into the respective slot until they engage.

Connecting the DC cables for battery parallel operation

⚠ WARNING!

Danger due to loose and/or incorrectly clamped single conductors.
This can result in serious injury and damage to property.

- ▶ Check that the single conductors are secure in the crimp contact.
- ▶ Make sure that the single conductor has been fully inserted into the crimp contact and that no single strands are protruding out of it.

IMPORTANT!
The max. cable length between the inverter and battery is 30 m; between the battery systems the max. cable length is 10 m. The cable lengths between the battery systems should be as short as possible to avoid a voltage drop.

1

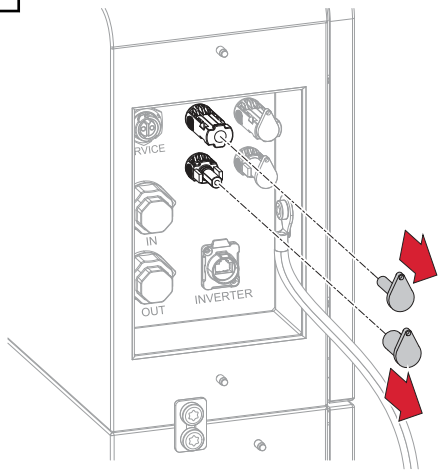

Remove the caps.

2

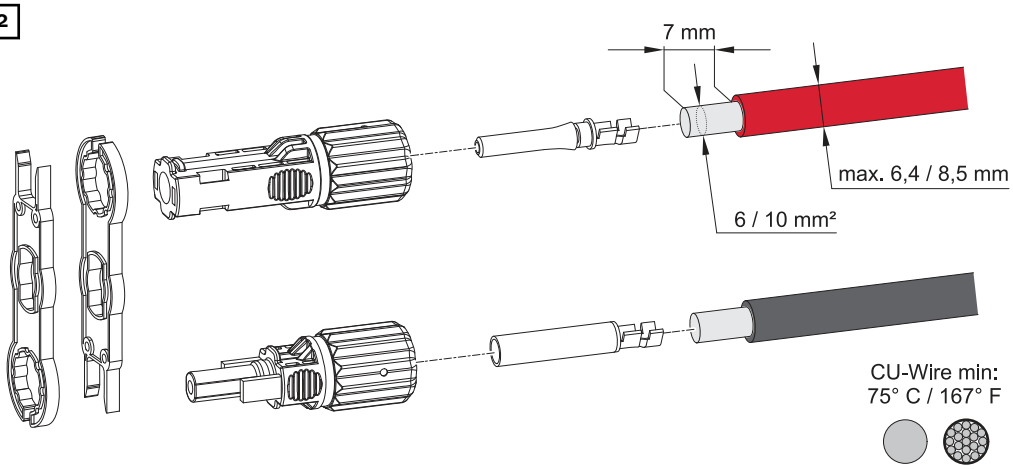

Select the cable cross-section in accordance with the instructions in Permitted cables for the electrical connection on page 36. Strip the insulation of the single conductors by 7 mm (0.27 inch).

3

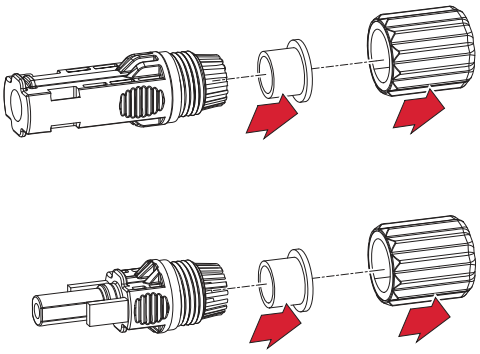

Disassemble the MC4 plugs.

4

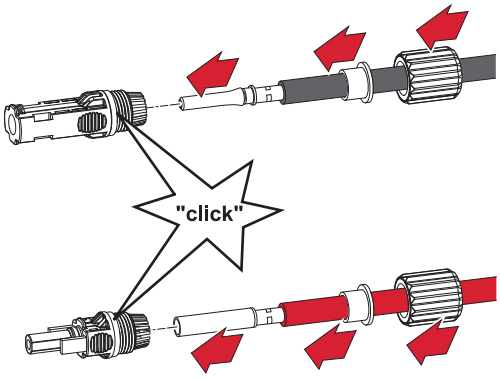

Guide the DC cable through the cable gland and the sealing ring. Crimp the crimp contact onto the stripped DC cable using a suitable crimping tool. Push the crimp contact into the MC4 plug until there is an audible click.

5

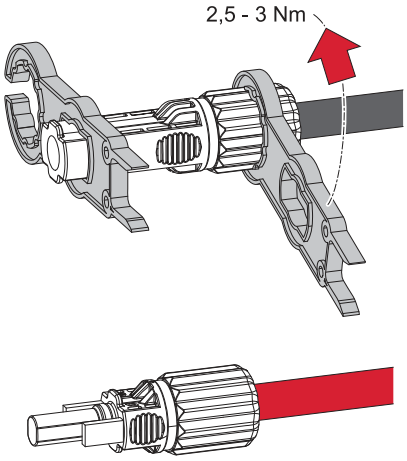

Tighten the cable gland to a torque of 2.5 Nm - 3 Nm.

6

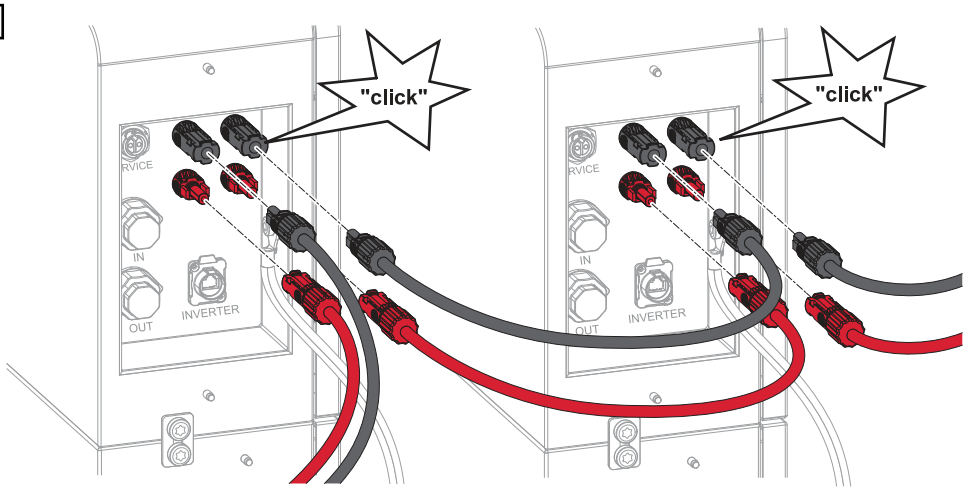

Insert the MC4 plugs (+/-) into the respective slot until they engage.

Connecting the data communication cables

PIN assignment

Observe the following points when connecting the data communication cable.

- Use network cables of type CAT5 STP or higher.
- Use a twisted cable pair for corresponding data cables.
- Use double insulated or sheathed data cables when they are near to bare conductors.
- Use shielded twisted pair cables to avoid interference.

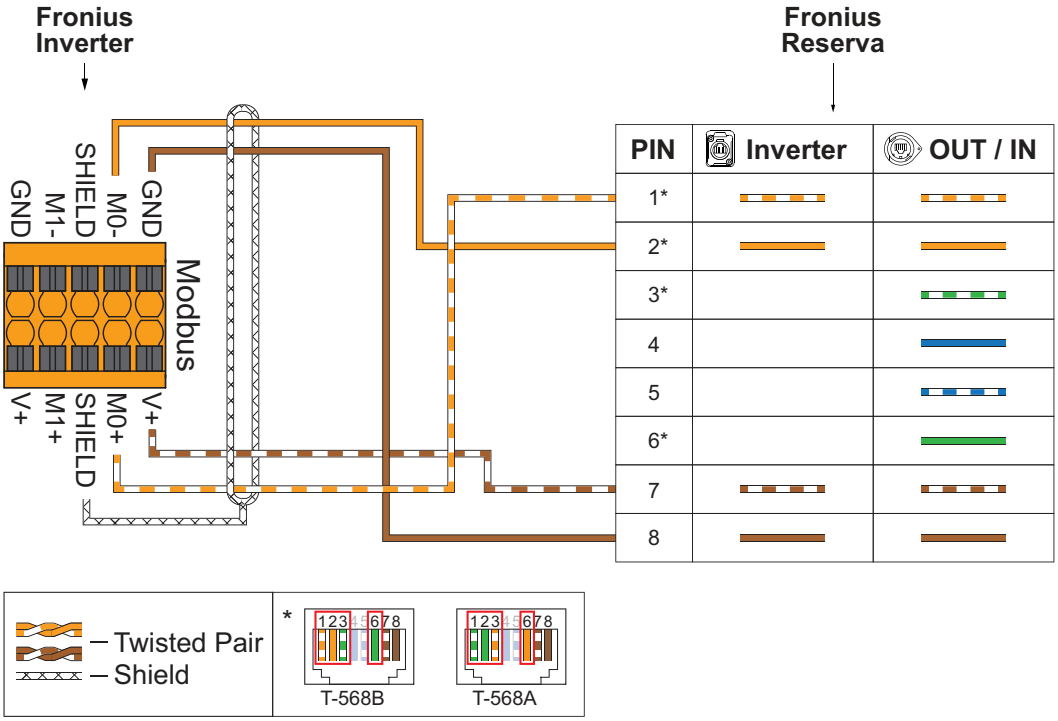

Connecting data communication cables to inverters

IMPORTANT!
The maximum cable length between the inverter and the battery is 30 m.

IMPORTANT!
In case of improper connection, it is not possible to guarantee the strain relief and protection class IP65 for the data communication connection. The maximum possible width of the RJ45 plug is 12 mm. Only RJ45 plugs without locking and anti-kink protection are compatible with the LP-16-C/RJ45 plug.

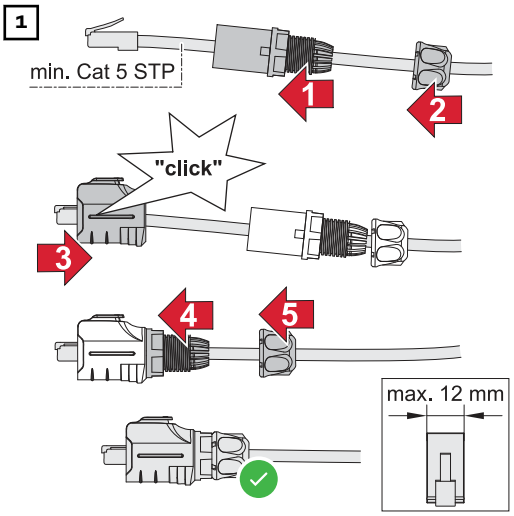

First, guide the data cables through the union nut and then through the cable gland. Insert the plug insert until there is an audible click. Fasten the union nut to the cable gland.

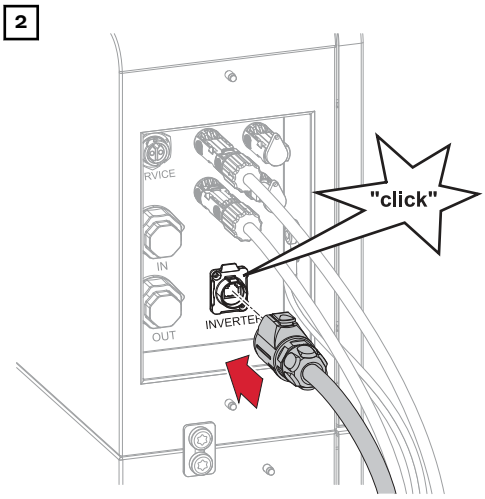

Connect the data cable to the "INVERTER" data communication connection until there is an audible click.

Connecting the data communication cables for battery parallel operation

IMPORTANT!
The max. cable length between the inverter and battery is 30 m; between the battery systems the max. cable length is 10 m.

IMPORTANT!
In case of improper connection, it is not possible to guarantee the strain relief and safety class IP65 for the data communication connection. The maximum possible width of the RJ45 plug is 12 mm. Only RJ45 plugs without locking and anti-kink protection are compatible with the cable gland.

Overview

The terminating resistors are installed at the factory. For parallel battery operation, the terminating resistors must be installed as shown below.

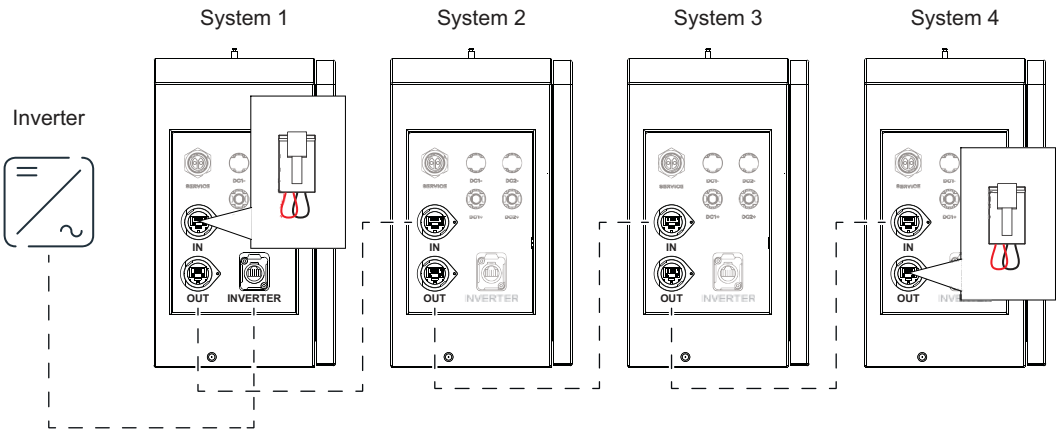

1

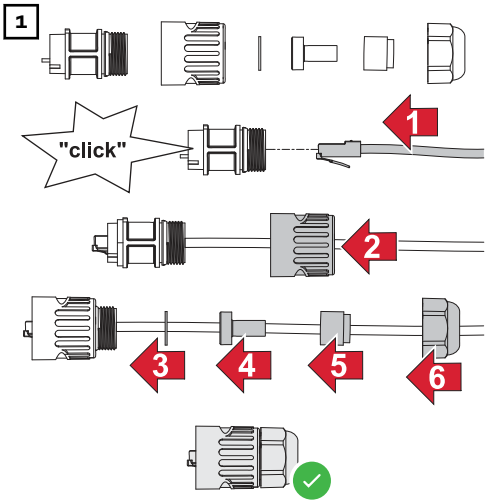

First, guide the data cable through the union nut, then through the seal and then through the cable gland. Fasten the union nut to the cable gland.

2

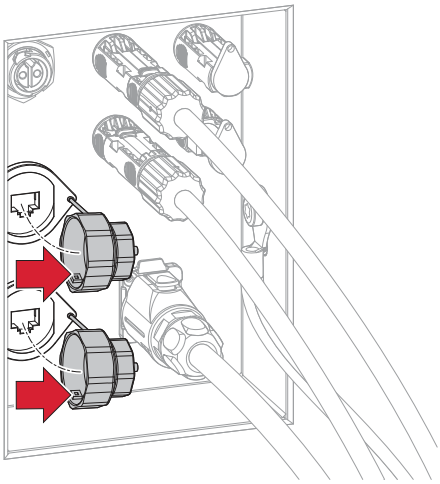

Remove the closure caps of the data communication connections “IN” (data input) or “OUT” (data output) by rotating them 90° to the left.

3

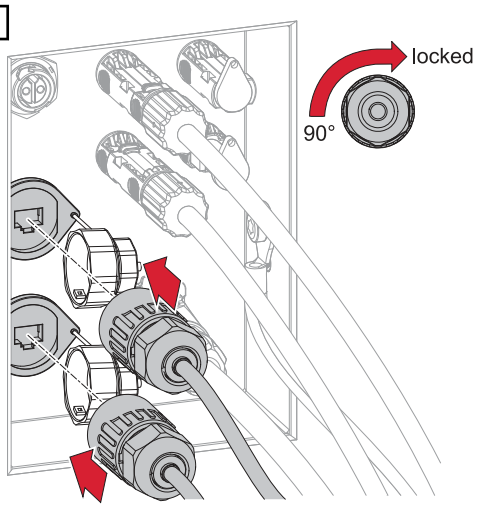

Connect the data cable to the “IN” (data input) or “OUT” (data output) data communication connection and rotate 90° to the right.

Terminating resistors

Installation without terminating resistors can lead to interference in the operation of the PV system. To ensure smooth operation, install the terminating resistors according to the following overview.

For permissible cables and max. distances for the data communication area, see chapter Permitted cables for the data communication connection on page 36.

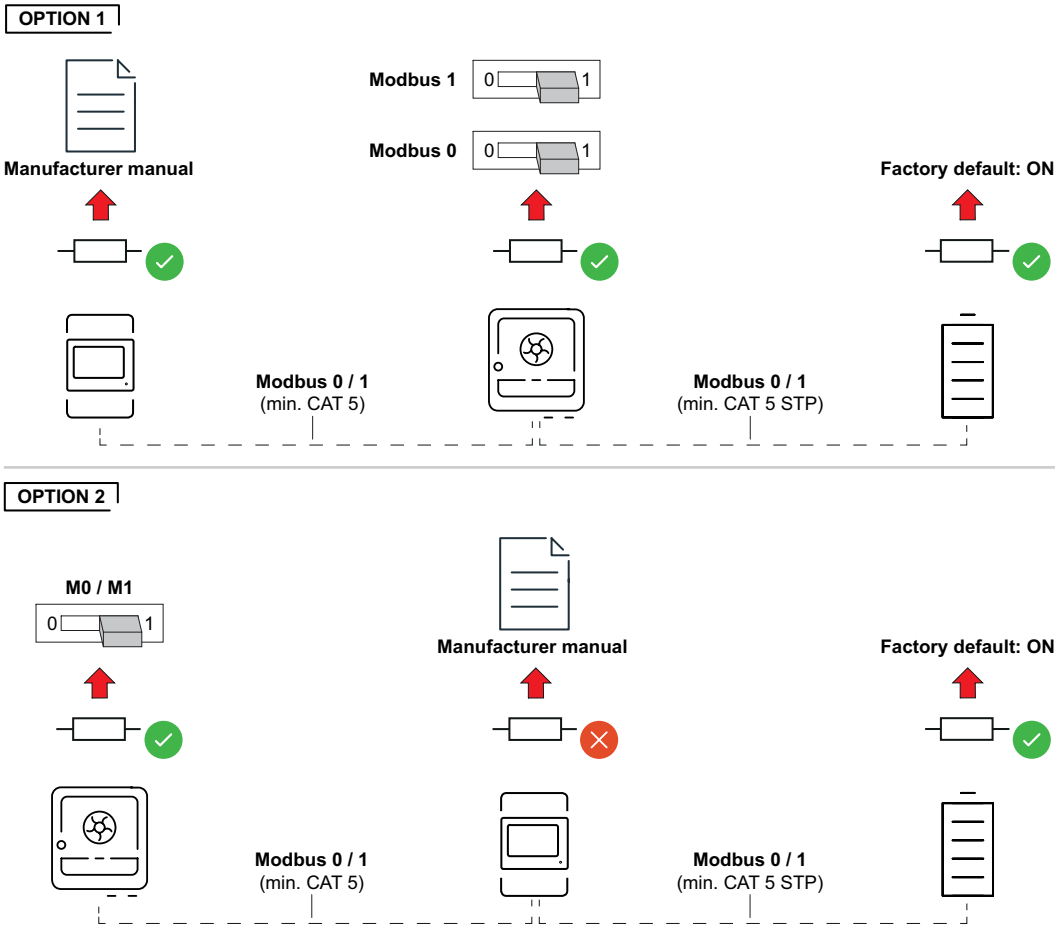

Finally...

Mounting covers on the battery

1

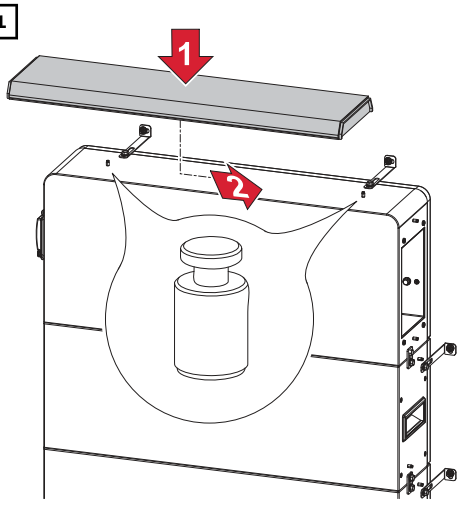

Place the cover (top) on the Reserva BMS and slide it to the right until the cover clicks into place.

2

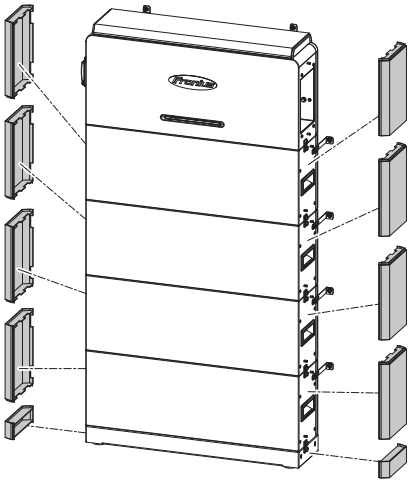

Push in the side covers from above, starting with the base plate, until the covers engage.

3

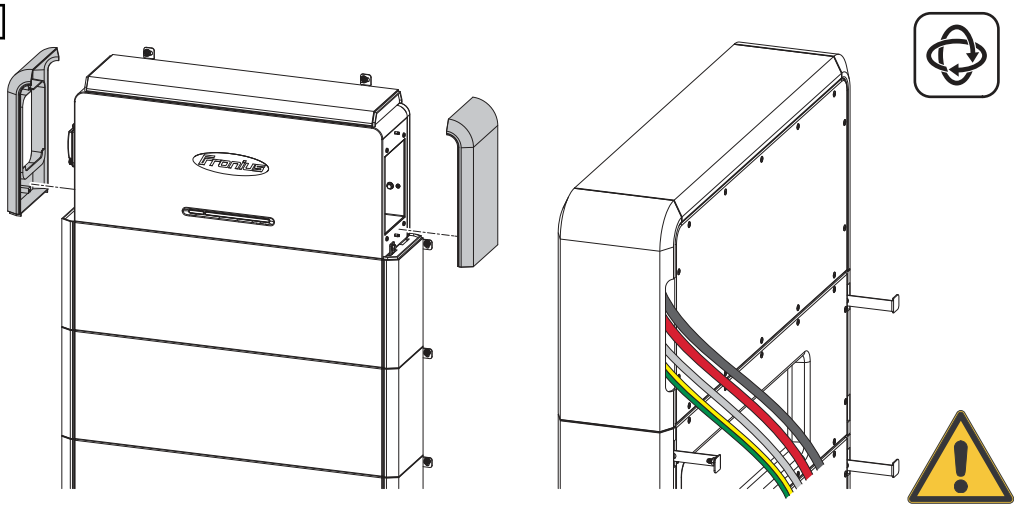

Push in the side covers of the Reserva BMS from above until the covers engage. Feed the cables through the side cutout in the cover.

Adding/replacing the Reserva module of the battery system

Safety

⚠ WARNING!

Danger of electric shock due to live HVB connectors.
This can result in serious injury and damage to property.
- ▶ Use the integrated handles for lifting and lowering.
- ▶ Wear personal protective equipment.
- ▶ Take off conductive objects, such as watches, bracelets, and rings.

⚠ WARNING!

Danger due to contaminated battery connections.
This can result in serious injury and damage to property.
- ▶ Protect battery connections from soiling.
- ▶ Check the battery connections for contamination.
- ▶ Wear personal protective equipment (insulated gloves, safety goggles, protective clothing) and a lint-free cloth to clean contaminated battery connections; do not use cleaning agents.

⚠ CAUTION!

Danger due to improper handling during transport or installation of the battery.
This can result in injuries.
- ▶ Use the integrated handles for lifting and lowering.
- ▶ When lowering the battery, ensure that no limbs are located between the attachment and the battery.
- ▶ Wear personal protective equipment.
- ▶ Make sure that there are sufficient fastening points to prevent the battery from tipping over.

Requirements for expanding the battery system

The following points must be observed when expanding the battery system in order to be able to use the full capacity:
- The state of charge (SoC) must be 30% (activate **Service Mode**, see chapter Setting the State of Charge (SoC) with Service Mode on page49).
- Carry out expansion within the first 2 years from starting for the first time.
- Charging/discharging cycle count <300

NOTE!

Restriction on expansions of the battery system after 2 years.
It is possible to expand the battery system after 2 years, however with the restriction that the added battery module is operated with the lowest state of health (SoH) in the battery system.

Example – Expansion outside of manufacturer's recommendation	
SoH new Reserva module	100%

Example – Expansion outside of manufacturer's recommendation	
SoH installed Reserva modules	96%
SoH entire battery system	**96%**

Setting the State of Charge (SoC) with Service Mode

☐ To activate **Service Mode**, a connection to the user interface of the inverter is required, see chapter Commissioning with the app on page 61 or Commissioning with the browser on page 61.

1. Open the user interface of the inverter.
2. Log in to the login section with user **Customer** or **Technician** and the relevant password.
3. Open the **Energy Management** > **Battery Management** > **Service Mode** menu area.
4. Activate **Service Mode**.
5. Click the **Save** button to save the settings.

✓ *The service mode is activated and the battery is charged/discharged to 30% SoC.*

Switching off the photovoltaic system and battery

1

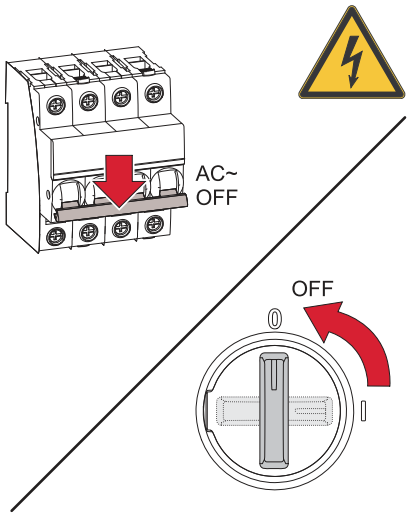

Turn off the automatic circuit breaker. Set the DC disconnector of the inverter to the "Off" switch position.

IMPORTANT!
Wait for the capacitors of the inverter to discharge!

2

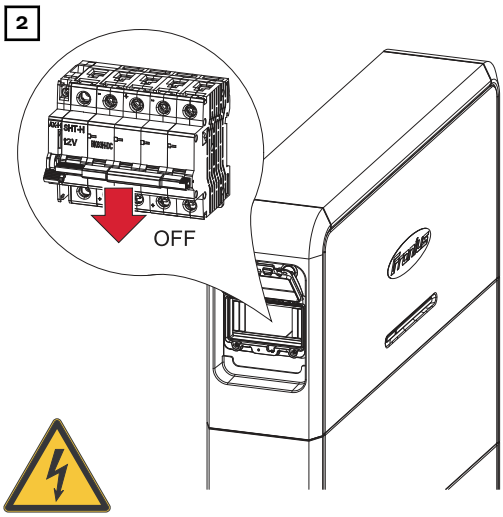

Set the DC disconnector of the Reserva to the "Off" switch position.

Removing covers from the battery

1

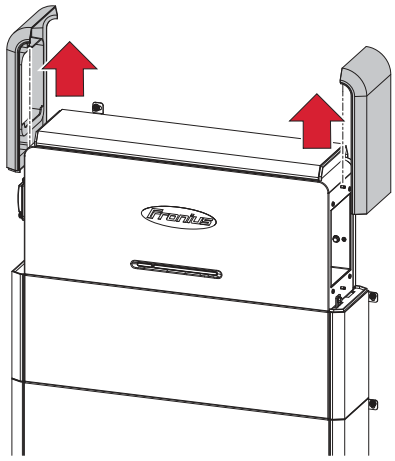

Push the left and right covers on the Reserva BMS up and lift them off.

2

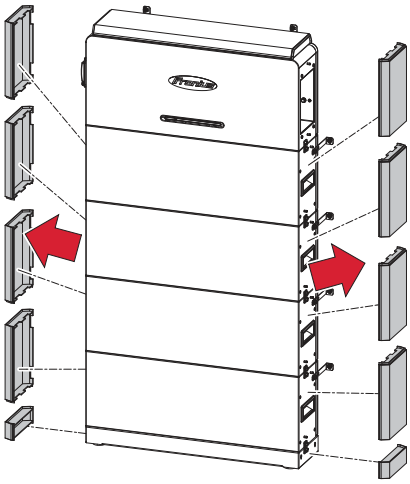

Starting at the top Reserva module, push the left and right covers up and lift them off.

3

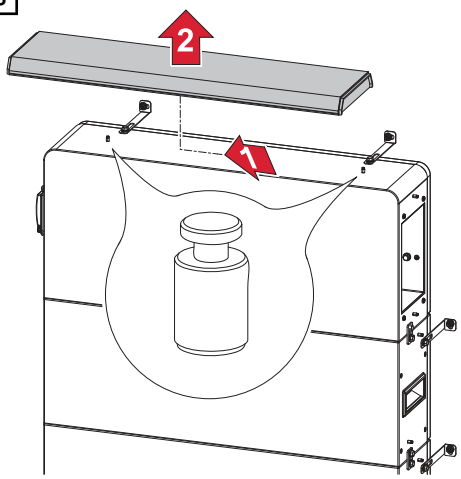

Slide the top cover on the Reserva BMS to the left and lift off.

Disconnecting and dismantling the Reserva BMS

1

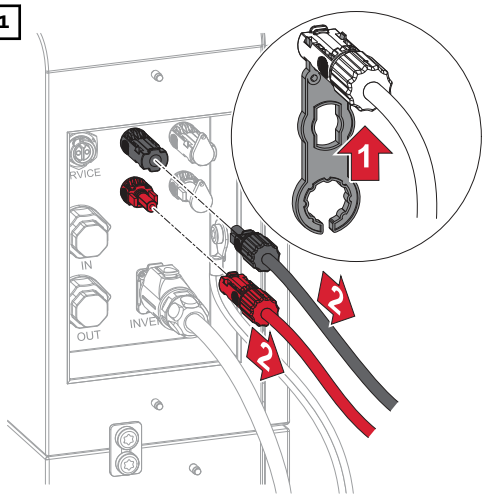

Loosen the MC4 plugs (+/-) using a suitable tool.

2

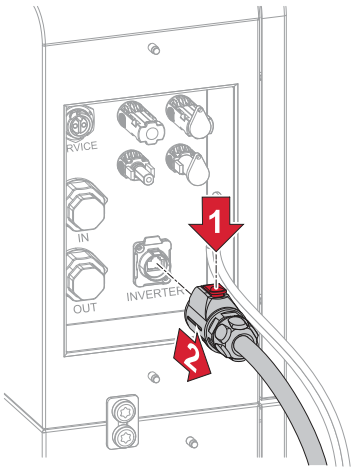

Press the locking mechanism on the plug of the "INVERTER" data cable and remove the plug.

For batteries in parallel operation, also disconnect the "IN" and "OUT" data cables.

3

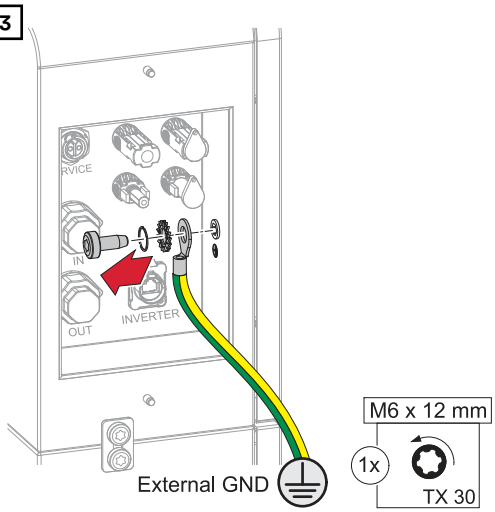

Loosen the ground conductor (PE) using a screwdriver (TX30).

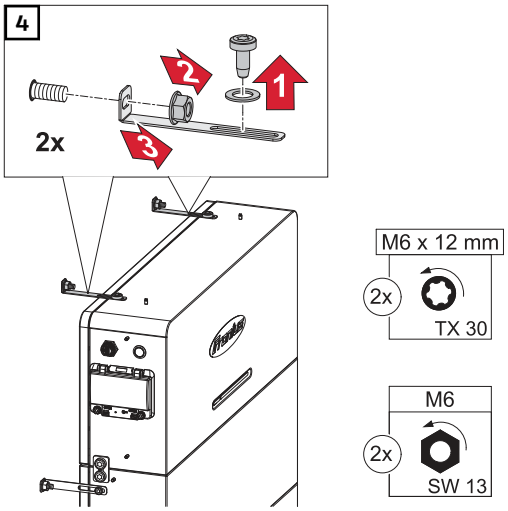

Loosen the L-shaped mounting brackets.

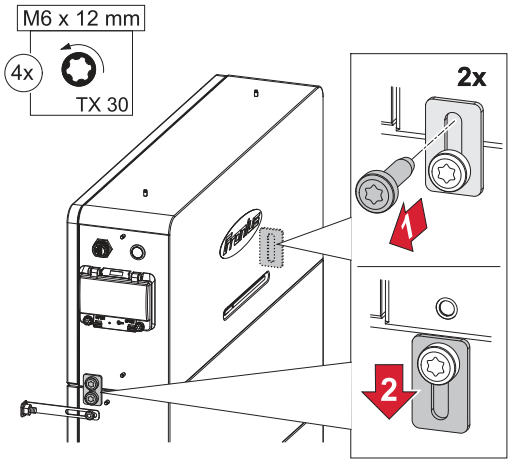

Undo the 2 connecting tabs.

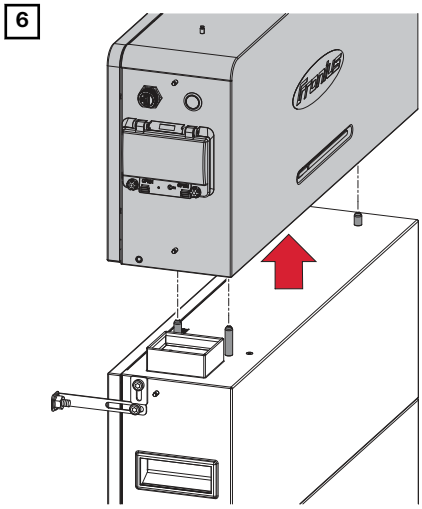

Lift the Reserva BMS installed in parallel off the last Reserva module.

Installing new Reserva module

1

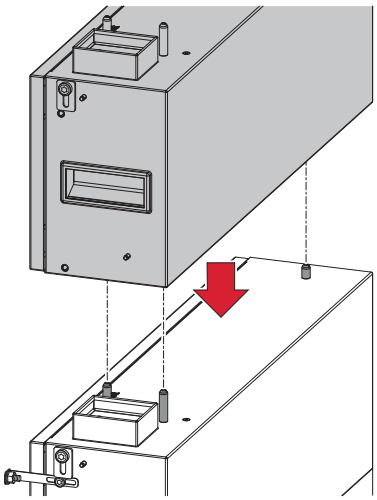

Position the new Reserva module in parallel.

2

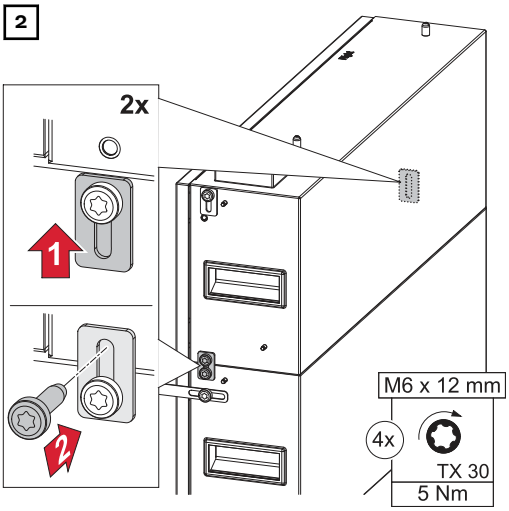

Fasten the 2 connecting tabs using the screws supplied (TX30) and to a torque of 5 Nm.

3

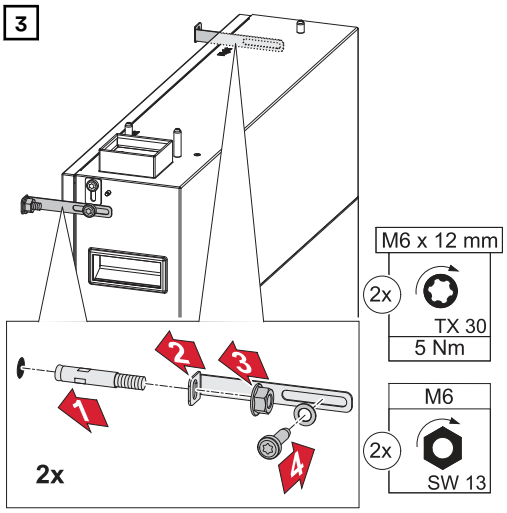

IMPORTANT!
Ensure there are sufficient fastening points, see chapter Wall installation on page31.

Fasten the L-shaped mounting brackets using the supplied screws (TX30), washers and to a torque of 5 Nm. Insert the bolt anchors into the wall and fasten with a socket wrench (width across flats 13).

Installing the Reserva BMS

1

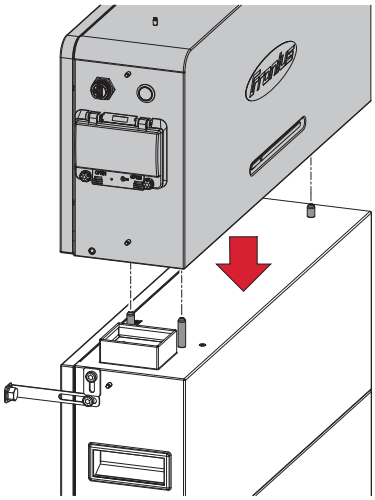

Place the Reserva BMS parallel to the previous Reserva module.

2

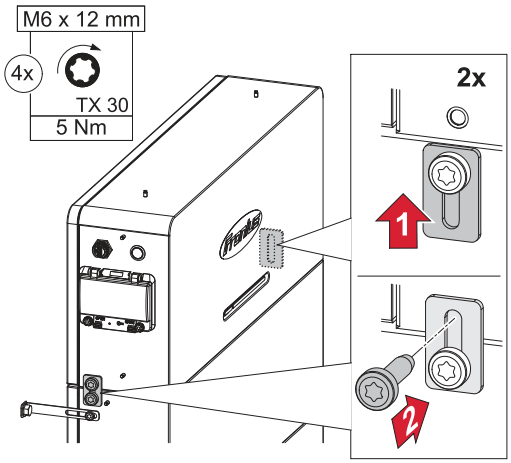

Fasten the 2 connecting tabs using the screws supplied (TX30) and to a torque of 5 Nm.

3

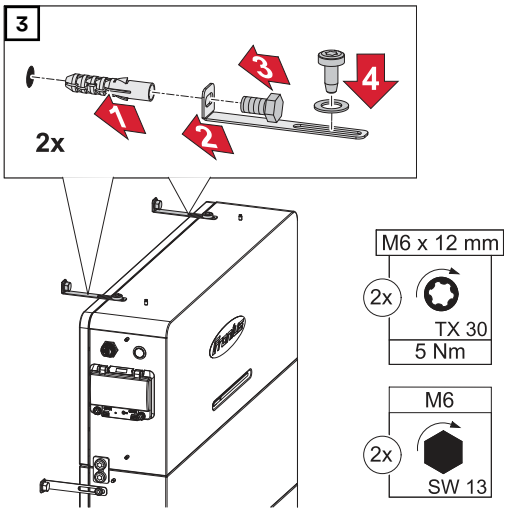

Fasten the L-shaped mounting brackets using the supplied screws (TX30), washers and to a torque of 5 Nm. Insert the bolt anchors into the wall and fasten with a socket wrench (width across flats 13).

Connecting the Reserva BMS

1

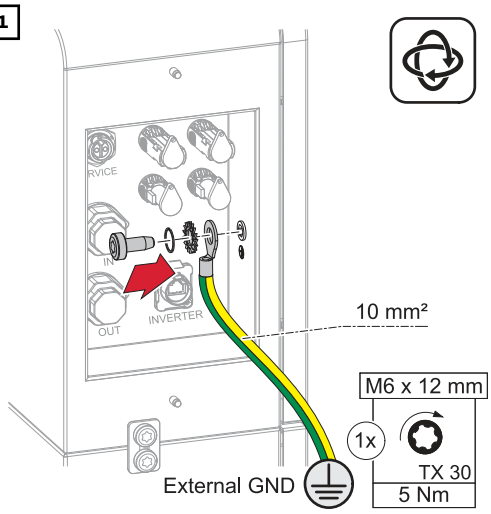

Fasten the ground conductor (PE) to the ground conductor connection using the screws supplied (TX30) and to a torque of 5 Nm.

2

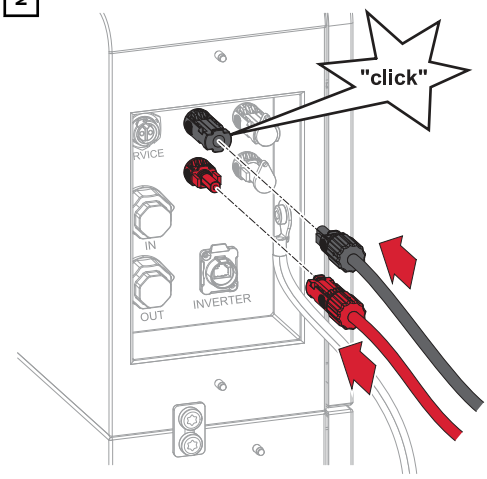

Insert the MC4 plugs (+/-) into the respective slot until they engage.

3

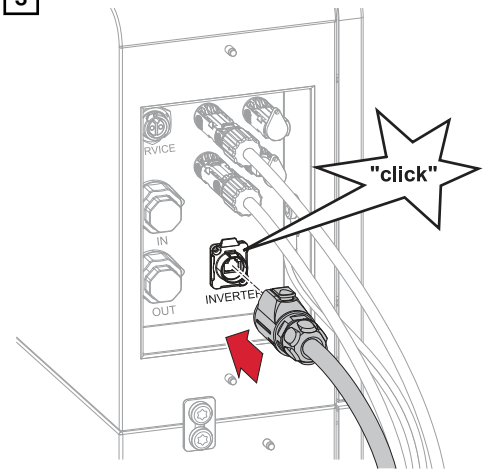

Connect the data cable to the "INVERTER" data communication connection until there is an audible click.

Mounting covers on the battery

1

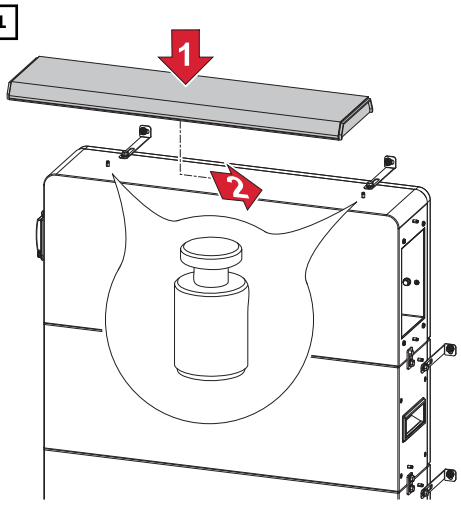

Place the cover (top) on the Reserva BMS and slide it to the right until the cover clicks into place.

2

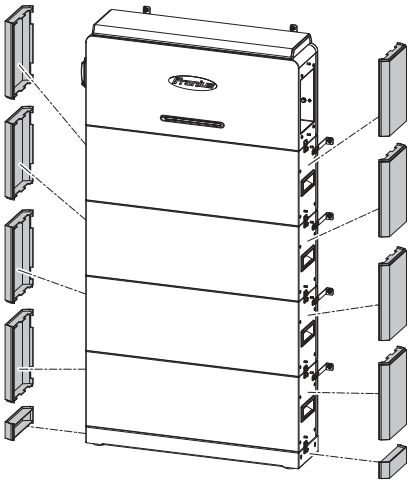

Push in the side covers from above, starting with the base plate, until the covers engage.

3

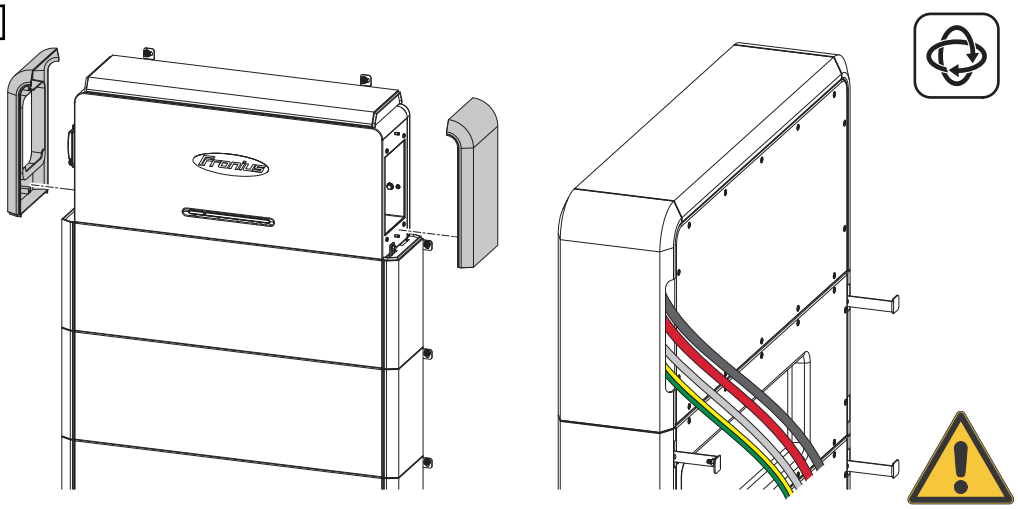

Push in the side covers of the Reserva BMS from above until the covers engage. Feed the cables through the side cutout in the cover.

Commissioning

Switching on the photovoltaic system

Switching on the photovoltaic system

1

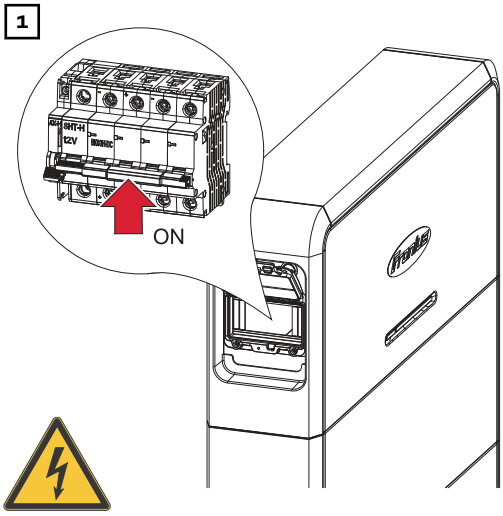

Turn the DC disconnector of the battery to the "On" switch setting.

2

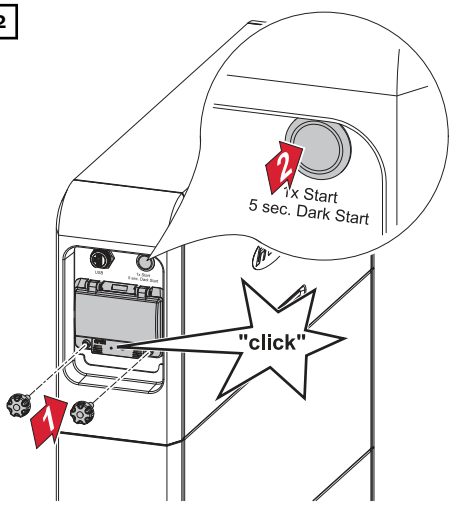

Close the cover of the DC disconnector until there is an audible click and secure it against unauthorized opening with the screws. Press the start button once to start the battery.

3

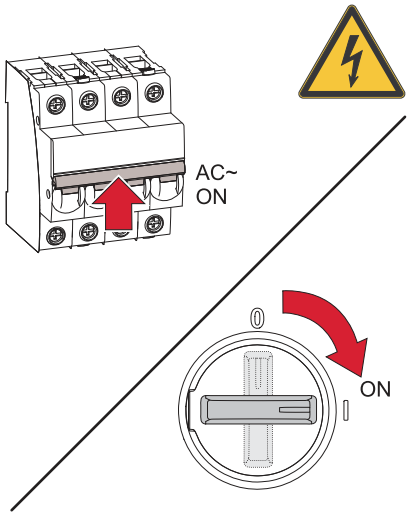

Turn on the automatic circuit breaker. Turn the DC disconnector of the inverter to the "On" switch setting.

Manual system start

Requirements

There is no energy available from the PV modules or from the public grid. If backup power operation or battery operation are not possible (e.g., deep discharge protection of the battery), the inverter and battery switch off.

Notification of system shutdown

Status codes about the inactive state of the battery are displayed on the user interface of the inverter. A notification via e-mail can be activated in Fronius Solar.web.

Manual battery start (dark start) after system shutdown

As soon as energy is available again, the inverter and the battery start operating automatically. If the battery has switched off to protect against deep discharge, for example, the battery must be started manually (dark start), see chapter Switching on the photovoltaic system on page59.

Starting backup power mode after system shutdown

To start backup power mode, the inverter requires energy from the battery. This is done manually on the battery as described below.

1

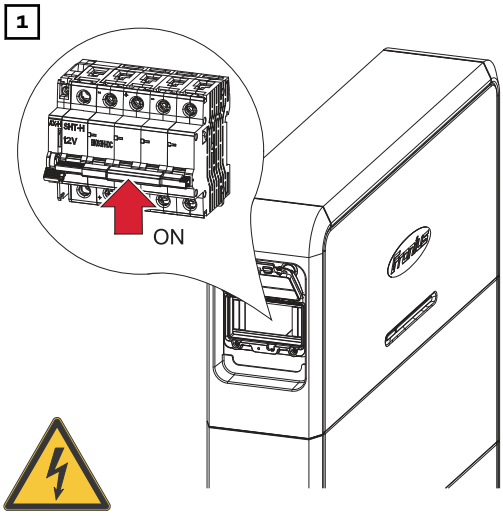

Turn the DC disconnector of the battery to the “On” switch setting.

2

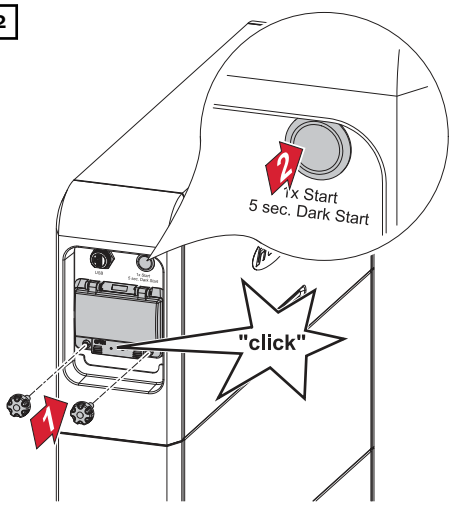

Close the cover of the DC disconnector until there is an audible click and secure it against unauthorized opening with the screws. Press and hold the start button for 5 seconds to start the battery.

Settings – User interface of the inverter

General

IMPORTANT! Settings in the **Device Configuration** menu item may only be entered by staff trained to do so!

To access the **Device Configuration** menu item, you must log in with user “Technician” and the technician password.

Commissioning with the app

The Fronius Solar.start app is required for commissioning. Depending on the mobile device used to perform the installation, the app is available on the relevant platform.

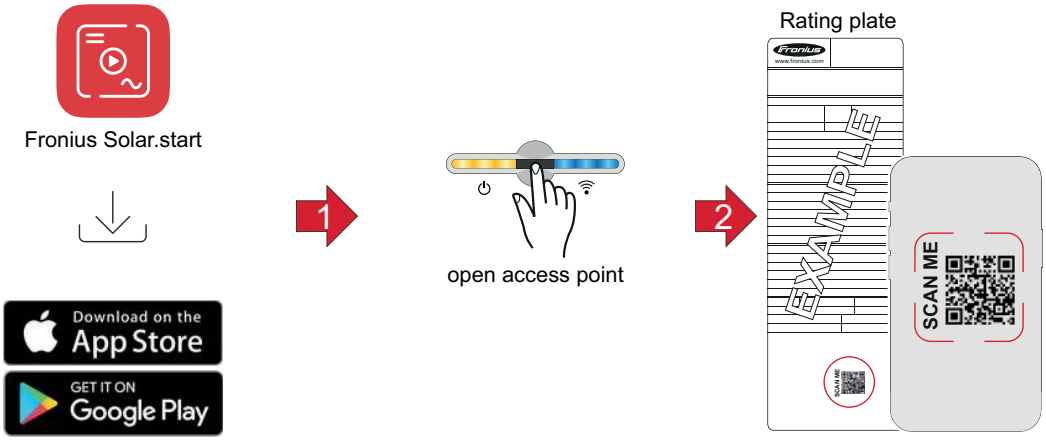

1. Download and install the Fronius Solar.start app.
2. Open the access point on the inverter by touching the sensor .
   ✓ *Communications LED flashes blue.*
3. Open the Fronius Solar.start app and scan the QR code on the rating plate of the inverter using a smartphone or tablet to connect to the inverter.
4. Add the battery as in chapter Adding a battery in the user interface of the inverter on page 62.

The network wizard and product setup can be performed independently. A network connection is required for the Fronius Solar.web installation wizard.

Commissioning with the browser

WiFi:

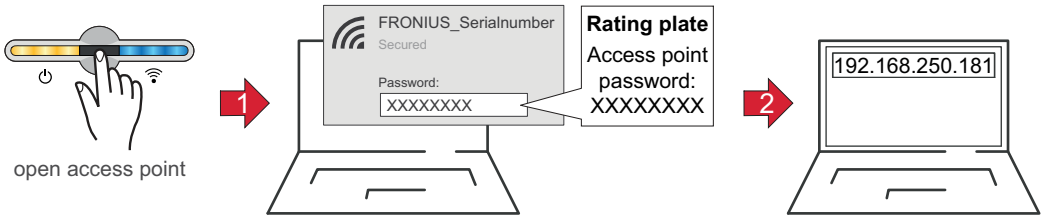

1. Open the access point on the inverter by touching the sensor .
   ✓ *Communications LED flashes blue.*
2. Establish the connection to the inverter in the network settings (the inverter is displayed with the name “FRONIUS_” and the serial number of the device).

3 Enter the password from the inverter's rating plate and confirm.
IMPORTANT!
To enter the password in Windows 10, first select the **Connect using a security key instead** link to be able to establish the connection with the password.

4 Enter the IP address 192.168.250.181 in the address bar of the browser and confirm to connect to the inverter.

5 Add the battery as in chapter Adding a battery in the user interface of the inverter on page 62.

The network wizard and product setup can be performed independently. A network connection is required for the Fronius Solar.web installation wizard.

Ethernet:

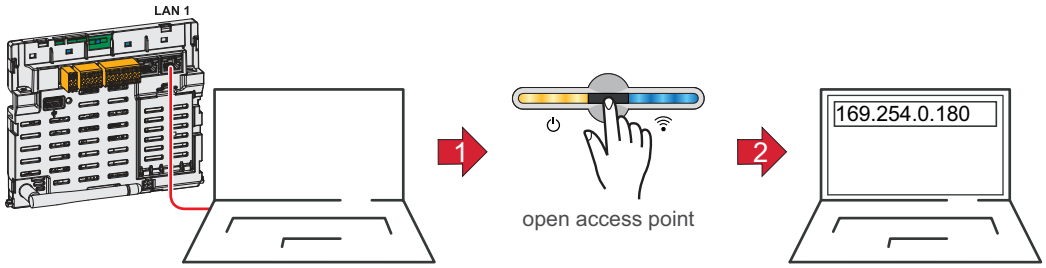

1 Establish a connection to the inverter (LAN1) using a network cable (min. CAT5 STP).

2 Open the access point on the inverter by touching the sensor .

✓ *Communications LED flashes blue.*

3 Enter the IP address 169.254.0.180 in the address bar of the browser and confirm to connect to the inverter.

4 Add the battery as in chapter Adding a battery in the user interface of the inverter on page 62.

The network wizard and product setup can be performed independently. A network connection is required for the Fronius Solar.web installation wizard.

Adding a battery in the user interface of the inverter

1 Open the user interface of the inverter.

2 In the **Login** menu area or in the **User** > **User Login** menu area, log in with username and password.

3 Go to the **Device Configuration** > **Components** menu area.

4 Click on the **Add components+** button.

5 Select the **Fronius battery** battery in the **Type** drop-down list.

6 Click on the **Add** button.

7 Click the **Save** button to save the settings.

✓ *The battery has been added to the PV system.*

Firmware update

Obsolete firmware/software versions may lead to incompatibilities between the inverter and the battery. In this case, the following steps are to be performed:

1 Open the user interface of the inverter.

2 In the **Login** menu area or in the **User** > **User Login** menu area, log in with username and password.

3 Open the **System** > **Update** menu area.

4 Drag the firmware file into the **Drag & drop file here** field, or select via **Browse file**.

✓ *The update is performed.*

All available updates are provided on the product page and in the "Fronius Download Search" area at www.fronius.com.

Appendix

Service, maintenance and disposal

Cleaning

Wipe the surfaces of the battery system, if necessary, with a damp cloth.
Do not use cleaning agents, scouring agents, solvents, or similar products to clean the inverter.

Maintenance

The device is maintenance-free. Service work may only be carried out by qualified technical personnel.

Forced re-charging

Forced re-charging to protect against deep discharge is carried out automatically using solar energy or energy from the public grid if the minimum state of charge (SoC) of the battery is undershot and the prerequisites are met.

NOTE!

Risk of deep discharge of battery modules.
This can result in irreparable damage to the battery modules.
▶ If the minimum state of charge (SoC) of the battery is undershot, it must be re-charged within 7 days to protect against deep discharge.

Requirements for forced recharging of the battery system
- The DC disconnector of the battery must be in the “ON” switch position.
- Grid-connected operation of the inverter.

Start forced recharging if the battery has automatically switched off to protect against deep discharge; see chapter Switching on the photovoltaic system on page59.

Disposal

Waste electrical and electronic equipment must be collected separately and recycled in an environmentally sound manner in accordance with the European Directive and national law. Used equipment must be returned to the distributor or through a local authorized collection and disposal system. Proper disposal of the used device promotes sustainable recycling of resources and prevents negative effects on health and the environment.

Packaging materials
- Collect separately
- Observe local regulations
- Crush cardboard boxes

Warranty provisions

Fronius manufacturer's warranty

Detailed warranty conditions specific to your country can be found at www.fronius.com/solar/garantie .

Technical data

Fronius Reserva

General data	
Usable capacity [1)]	30.85 Ah
Max. charging current - 20 °C to -10 °C - 10 °C to 5 °C 5 °C to 15 °C 15 °C to 45 °C 45 °C to 50 °C 50 °C to 55 °C	 2.5 A 8.0 A 16.0 A 32.0 A 21.5 A 8.0 A
Max. discharge current -20°C to 0°C 0°C to 45°C 45°C to 50°C 50°C to 55°C	 16.0 A 32.0 A 21.5 A 8.0 A
Max. charge/discharge currents (25 °C, 5 s)	37.76 A
Calendar service life (25 °C)	10 years
Charging/discharging cycles (SoH ≥ 60%)	6000 cycles
Permitted ambient temperature	-20 °C to 55 °C
Optimum operating temperature	15 °C to 30 °C
Permissible humidity	5% to 95%
Cooling	Convection cooling
Height above sea level	≤ 2000 m
Discharge rate Reserva module (25 °C)	≤ 1.5%/month
Number of battery modules	2 - 5 pcs.
Max. battery systems in parallel operation	4 pcs.
Data communication between inverter and battery	RS485
Certifications	IEC 62619:2022
	CE
	VDE-AR-E 2510-50:2017-05
	EN 62477-1:2012+A11+A1+A12
EMC standard	EN IEC 61000-6-1:2019
	EN IEC 61000-6-3:2021
UN Transportation Testing standard	UN 38.3
Environmental protection certifications	ROHS
	REACH
Protection rating (when installed)	IP65

Electrical data	6.3	9.5	12.6	15.8
Number of modules	2	3	4	5
Usable energy (kWh)	6.31	9.47	12.63	15.79
Nominal voltage (V)	204.8	307.2	409.6	512
Output voltage range (V)	179.2 ~ 230.4	268.8 ~ 345.6	358.4 ~ 460.8	448 ~ 576
Operating voltage range (V)	185.6 ~ 227.2	278.4 ~ 340.8	371.2 ~ 454.4	464 ~ 568
Charging/discharging power (kW)	5.94	8.91	11.88	14.85
Peak value of charging/discharging power (kW) (25 °C, 5 s)	8.45	12.68	16.91	21.14

Mechanical data	6.3	9.5	12.6	15.8
Dimensions (mm) including covers Height: Width: Depth:	 890 772 176	 1140 772 176	 1390 772 176	 1640 772 176
Weight (kg)	86.5	120	153.5	187

Explanation of footnotes

1) 100% depth of discharge (DoD), 0.2 C charging and discharging rate at 25 °C.

Dimensions

Fronius Reserva

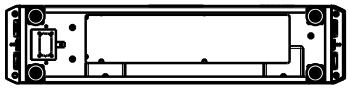

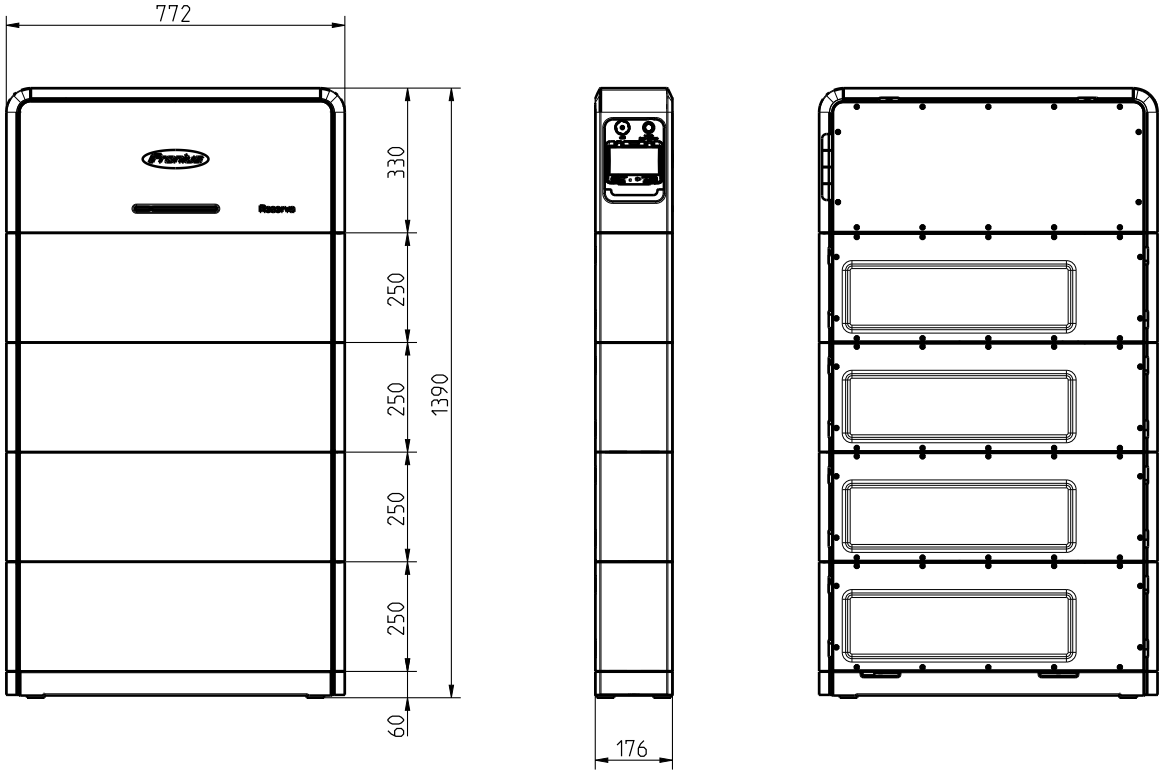

fronius.com/en/solar-energy/installers-partners/products-solutions/monitoring-digital-tools

MONITORING & DIGITAL TOOLS

Fronius International GmbH
Froniusstraße 1
4643 Pettenbach
Austria
contact@fronius.com
www.fronius.com

At www.fronius.com/contact you will find the contact details of all Fronius subsidiaries and Sales & Service Partners.