User Manual

H3/AC3 SERIES

In order to prevent improper operation before use, please carefully read this manual.

Table of Contents

1. Notes on This Manual 1
    1.1 Scope of Validity 1
    1.2 Target Group 1
    1.3 Symbols Used 1
2. Safety 2
    2.1 Appropriate Usage 2
    2.2 PE Connection and Leakage Current 3
3. Introduction 4
    3.1 Basic Features 4
    3.2 Dimensions 8
    3.3 Terminals of inverter 9
4. Technical Data 9
    4.1 PV Input (For H3 Only) 9
    4.2 Battery 10
    4.3 AC Output/Input 10
    4.4 EPS Output 11
    4.5 Efficiency and Protection 11
    4.6 General Data 12
5. Installation 13
    5.1 Check for Physical Damage 13
    5.2 Packing List 13
    5.3 Mounting 14
6. Electrical Connection 18
    6.1 Circuit Overview 18
    6.2 PV Connection (For H3 Only) 19
    6.3 Battery Connection 21
    6.4 Grid Connection 22
    6.5 Earth Connection 25
    6.6 Electrical Connection 26
    6.7 EPS Connection (Non-parallel State) 47
    6.8 System Connection Diagrams 47
    6.9 Inverter Start-Up 48
    6.10 Inverter Switch Off 48
7. Firmware Upgrading 49
8. Operation 54
    8.1 Control Panel 54
    8.2 Function Tree 55
9. Maintenance 57
    9.1 Alarm List 57
    9.2 Troubleshooting and Routine Maintenance 62
10. Decommissioning 63
    10.1 Dismantling the Inverter 63
    10.2 Packaging 63
    10.3 Storage and Transportation 63

1. Notes on This Manual

1.1 Scope of Validity

This manual describes the assembly, installation, commissioning, maintenance and troubleshooting of the following model(s) of products:

H3-5.0-E	H3-6.0-E	H3-8.0-E	H3-9.9-E	H3-10.0-E	H3-12.0-E
AC3-5.0-E	AC3-6.0-E	AC3-8.0-E	AC3-9.9-E	AC3-10.0-E	

Note: Please keep this manual where it will be accessible at all times.

1.2 Target Group

This manual is for homeowners/ purchaser/ qualified electricians. Certain electrical operations described in this manual only can be performed by qualified electricians.

1.3 Symbols Used

The following types of safety instructions and general information appear in this document as described below:

⚠ DANGER
Danger! “Danger” indicates a hazardous situation which, if not avoided, will result in death or serious injury.
⚠ WARNING
Warning! “Warning” indicates a hazardous situation which, if not avoided, could result in death or serious injury.
⚠ CAUTION
Caution! “Caution” indicates a hazardous situation which, if not avoided, could result in minor or moderate injury.
NOTE
Note! “Note” provides important tips and guidance.

This section explains the symbols shown on the inverter and on the type label:

Symbols	Explanation
CE	Symbol Explanation CE mark. The inverter complies with the requirements of the applicable CE guidelines.
	Beware of hot surface. The inverter can become hot during operation. Avoid contact during operation.
	Danger of high voltages. Danger to life due to high voltages in the inverter!

	Danger. Risk of electric shock!
	Danger to life due to high voltage. There is residual voltage in the inverter which needs 5 min to discharge. Wait 5 min before you open the upper lid or the DC lid.
	Read the manual.
	Product should not be disposed as household waste.
	PE conductor terminal

2. Safety

2.1 Appropriate Usage

H3/AC3 series inverters are designed and tested in accordance with international safety requirements. However, certain safety precautions must be taken when installing and operating this inverter. The installer must read and follow all instructions, cautions and warnings in this installation manual.

- All operations including transport, installation, start-up and maintenance, must be carried out by qualified, trained personnel.
- The electrical installation & maintenance of the inverter shall be conducted by a licensed electrician and shall comply with local wiring rules and regulations.
- Before installation, check the unit to ensure it is free of any transport or handling damage, which could affect insulation integrity or safety clearances. Choose the installation location carefully and adhere to specified cooling requirements. Unauthorized removal of necessary protections, improper use, incorrect installation and operation may lead to serious safety and shock hazards or equipment damage.
- Before connecting the inverter to the power distribution grid, contact the local power distribution grid company to get appropriate approvals. This connection must be made only by qualified technical personnel.
- Do not install the equipment in adverse environmental conditions such as in close proximity to flammable or explosive substances; in a corrosive or desert environment; where there is exposure to extreme high or low temperatures; or where humidity is high.
- Do not use the equipment when the safety devices do not work or are disabled.
- Use personal protective equipment, including gloves and eye protection during the installation.
- Inform the manufacturer about non-standard installation conditions.
- Do not use the equipment if any operating anomalies are found. Avoid temporary repairs.
- All repairs should be carried out using only approved spare parts, which must be installed in accordance with their intended use and by a licensed contractor or authorized service

representative.

- Liabilities arising from commercial components are delegated to their respective manufacturers.
- Any time the inverter has been disconnected from the public network, please be extremely cautious as some components can retain charge sufficient to create a shock hazard. Prior to touching any part of the inverter please ensure surfaces and equipment are under touch safe temperatures and voltage potentials before proceeding.

2.2 PE Connection and Leakage Current

PV System Residual Current Factors

- In every PV installation, several elements contribute to the current leakage to protective earth (PE). these elements can be divided into two main types.
- Capacitive discharge current - Discharge current is generated mainly by the parasitic capacitance of the PV modules to PE. The module type, the environmental conditions (rain, humidity) and even the distance of the modules from the roof can effect the discharge current. Other factors that may contribute to the parasitic capacitance are the inverter's internal capacitance to PE and external protection elements such as lighting protection.
- During operation, the DC bus is connected to the alternating current grid via the inverter. Thus, a portion of the alternating voltage amplitude arrives at the DC bus. The fluctuating voltage constantly changes the charge state of the parasitic PV capacitor (i.e capacitance to PE). This is associated with a displacement current, which is proportional to the capacitance and the applied voltage amplitude.
- Residual current - if there is a fault, such as defective insulation, where an energized cable comes into contact with a grounded person, an additional current flows, known as a residual current.

Residual Current Device (RCMU)

- All inverters incorporate a certified internal RCMU (Residual current monitoring unit) to protect against possible electrocution in case of a malfunction of the PV array, cables or inverter (DC). The RCMU in the inverter can detect leakage on the DC side. There are 2 trip thresholds for the RCMU as required by the DIN VDE 0126-1-1 standard. A low threshold is used to protect against rapid changes in leakage typical of direct contact by people. A higher threshold is used for slowly rising leakage currents, to limit the current in grounding conductors for the safety. The default value for higher speed personal protection is 30mA, and 300mA per unit for lower speed fire safety.

Installation and Selection of an External RCD device

- An external RCD is required in some countries. The installer must check which type of RCD is required by the specific local electric codes. Installation of an RCD must always be conducted in accordance with local codes and standards. recommends the use of a type-A RCD. Unless a lower value is required by the specific local electric codes, suggests an RCD value between 100mA and 300mA.
- In installations where the local electric code requires an RCD with a lower leakage setting, the discharge current might result in nuisance tripping of the external RCD. The following steps are recommended to avoid nuisance tripping of the external RCD:
- Selecting the appropriate RCD is important for correct operation of the installation. An RCD with a rating of 30mA may trip at a leakage as 15mA (according to IEC 61008). High quality RCDs will typically trip at a value closer to their rating.

3. Introduction

3.1 Basic Features

H3/AC3 series are high-quality inverters which can convert solar energy to AC energy and store energy into battery. The inverter can be used to optimize self-consumption, store in the battery for future use or feed-in to public grid. Work mode depends on PV energy and user's preference.

- System advantages:
  - Advanced DSP control technology.
  - Utilizes the latest high-efficiency power component.
  - Advanced anti-islanding solutions.
  - IP65 protection level.
  - Max. Efficiency up to 98%. EU efficiency up to 97.3%. THD<3%.
  - Safety & Reliability: Transformerless design with software and hardware protection.
  - Export limitation (Meter/DRM0/ESTOP).
  - Power factor regulation. Friendly HMI.
  - LED status indications.
  - LCD display technical data, human-machine interaction through four touch keys.
  - PC remote control.
- System connection diagrams

Note: According to Australian safety requirements, the neutral cables of the on-grid side and backup side must be connected together. Otherwise, the backup function will not work.

This diagram is an example for an application that neutral connects with the PE in a distribution box.

For countries such as Australia, New Zealand, South Africa, etc, please follow local wiring regulations.

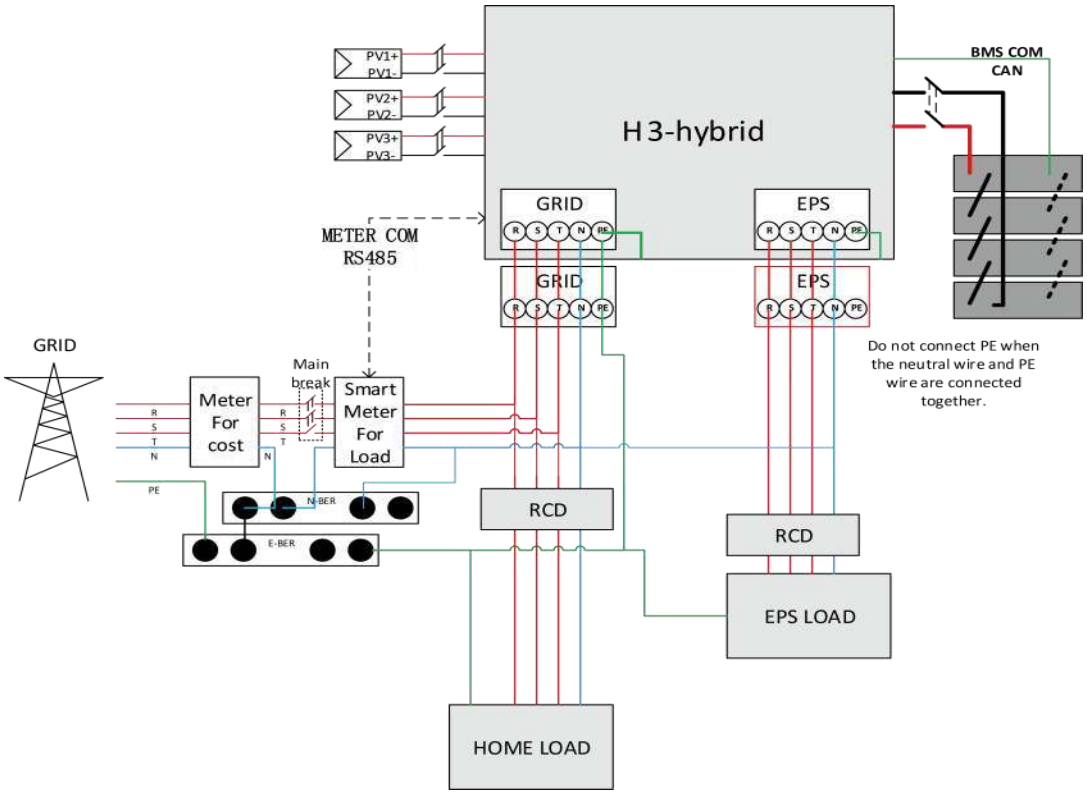

This diagram is an example for an application in which neutral is separated from the PE in the distribution box.

For countries such as China, Germany, the Czech Republic, Italy, etc, please follow local wiring regulations.

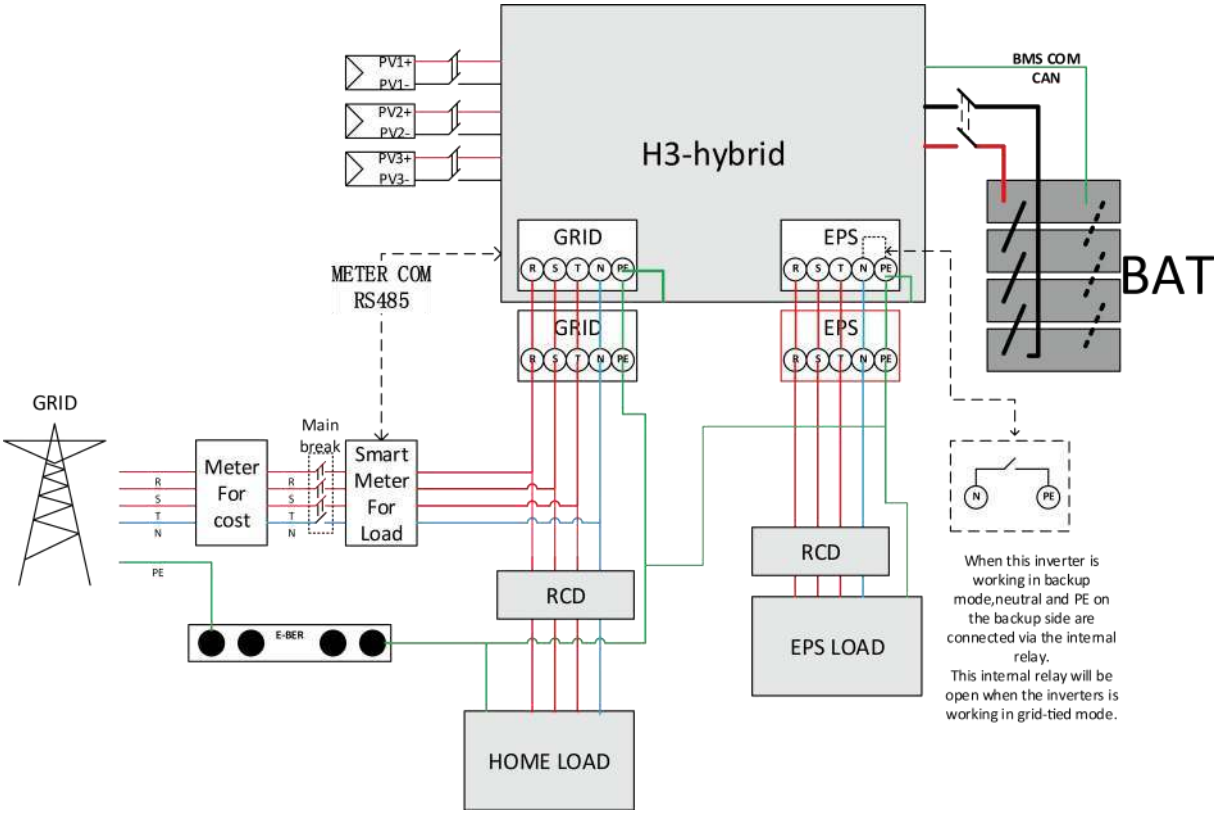

H3 system diagram for household use

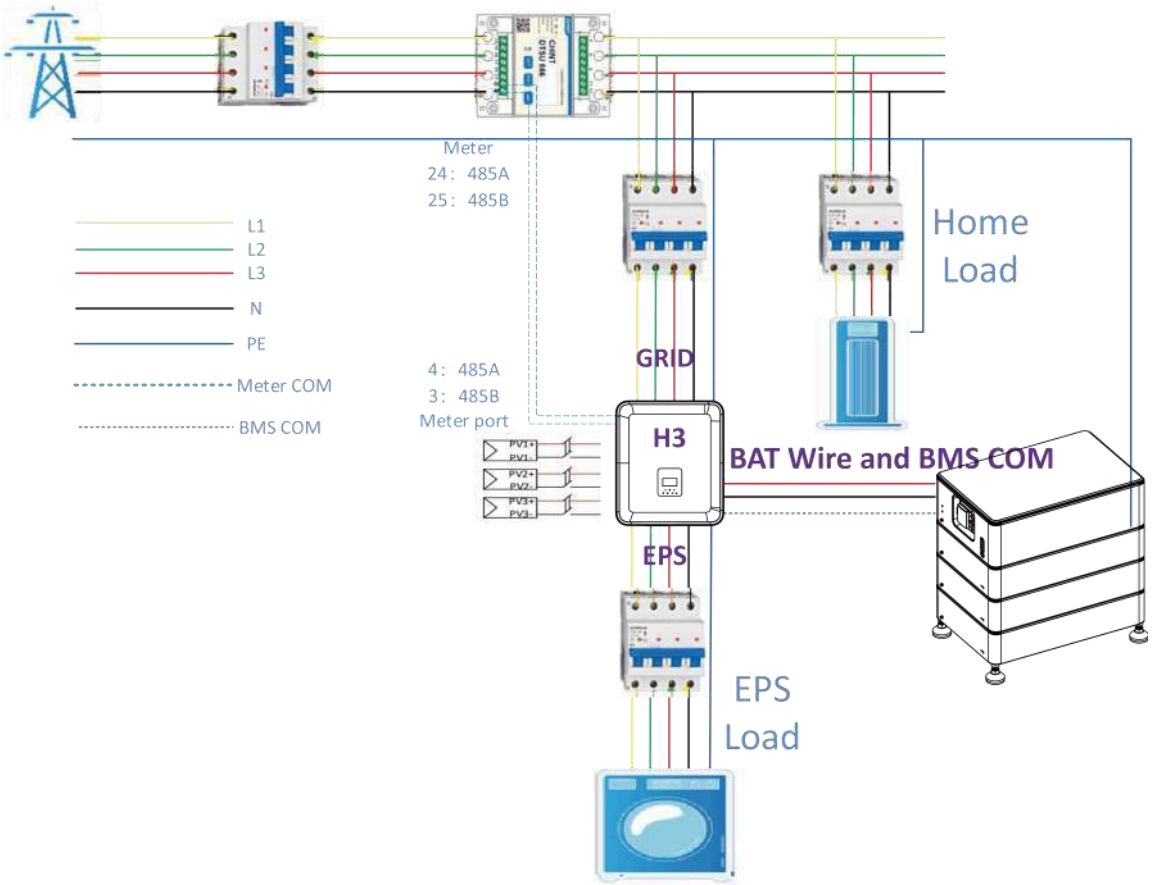

Important: H3 needs to be connected to the 3-phase 5-wire power grid system, and ensure that the GRID is connected to the N line, otherwise the machine will report the SW BUS VOLT fault.

Before installation, use a multimeter to confirm that the positive and negative terminals and voltage are correct.The positive and negative terminals and voltage of the battery are correct. When the battery voltage is between 180V-600V, it can enter the pure off-grid state. When the battery voltage is between 120V-600V, it can enter the grid-connected state.

After installation, you can check the battery voltage of the system through the screen, if the battery voltage is lower than 120V, the battery will not work, and will not be responsible for the damage to the system.

H3/AC3 Hybrid Inverters can be used in combination with other generation sources that are synchronized to the utility grid. A second energy meter can be connected to enable the H3/AC3 to specifically monitor other generation sources.

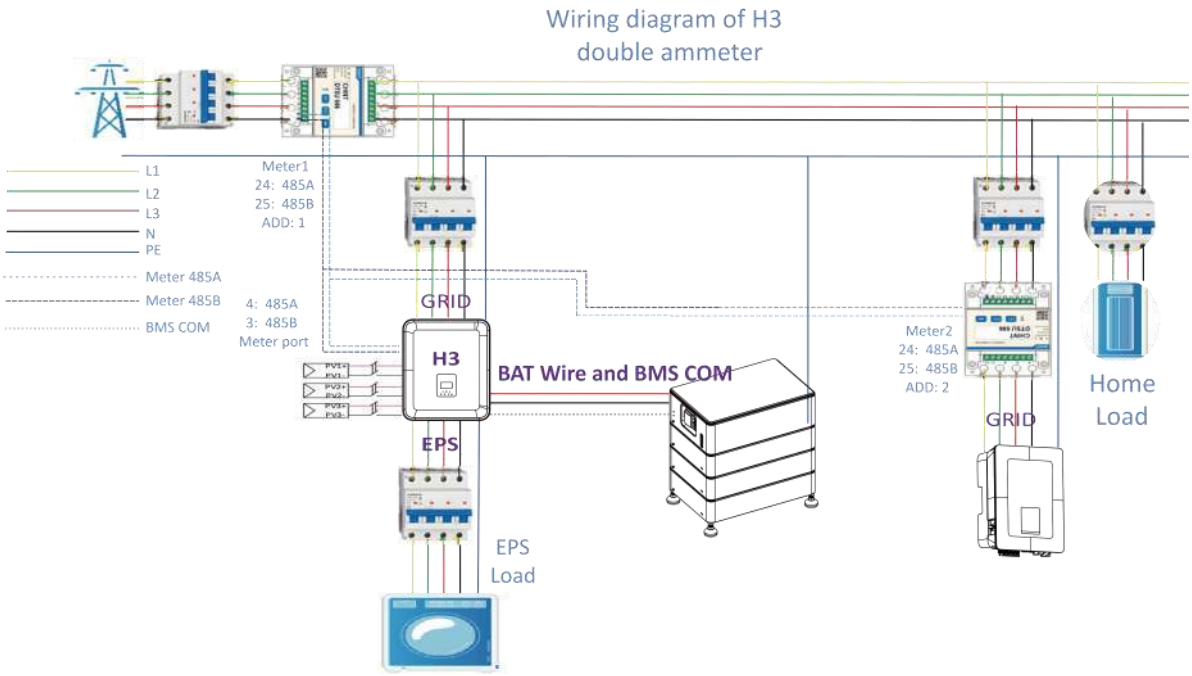

Important: supports the function of the second electricity meter, which is used to measure the power generation of other power generation equipment and to summarize the monitoring data on the website. only provides one electricity meter. The address of one of the meter is 1, which is used to measure the power consumption in the home to achieve spontaneous self-use. The address of the other meter is 2, which is used to measure the power generated by another power generation device in the home.
The addresses of the above two meters need to be corresponding, otherwise the flow diagram will be affected. The addresses of the above two meters cannot be the same otherwise the functions will be affected.

- Work modes:

Work modes	Description
Self-use (with PV Power)	Priority: load>battery>grid The energy produced by the PV system is used to optimize self-consumption. The excess energy is used to charge the batteries, then exported to gird.
Self-use (without PV Power)	When no PV is supplied, the battery will discharge for local loads first. Battery will charge when excess generation from other generation sources is detected.
Feed in priority	Priority: load>grid>battery In the case of the external generator, the power generated will be used to supply the local loads firstly, then export to the public grid. The redundant power will charge the battery.
Back up mode	When the grid is off, system will supply emergency power from PV or battery to supply the home loads (Battery is necessary in EPS mode).

PeakShaving	The system can be set to provide a peak shaving function. A Peak Shaving limit must be set by adjusting “Import Limit” to the desired value. We can increase the peak shaving support uptime by setting the “Threshold SOC”. When the battery is above the “Threshold SOC” the system will work in “Self-Use mode. When the battery is below the “Threshold SOC” the peak shaving function will be the priority and the system will only provide power from the battery when the “Import Limit” is exceeded. When below the “Threshold SOC” the system will charge from the grid when there is available power without exceeding the “Import Limit”. This is to ensure prolonged Peak Shaving support for extended periods. If the “Import Limit” is exceeded constantly for an extended period of time, the peak shaving function can only guarantee successful operation while energy remains within the battery. If the battery designated “low level” is reached, the peak shaving function will cease.

NOTICE
Charging time is when the battery is charged within the set time range. The setting of charging time can be used in the above work modes. The charging period is mainly used to set the charging time from the power grid to the battery. The PV can also charge the battery when there is sufficient PV outside of charging time.

3.2 Dimensions

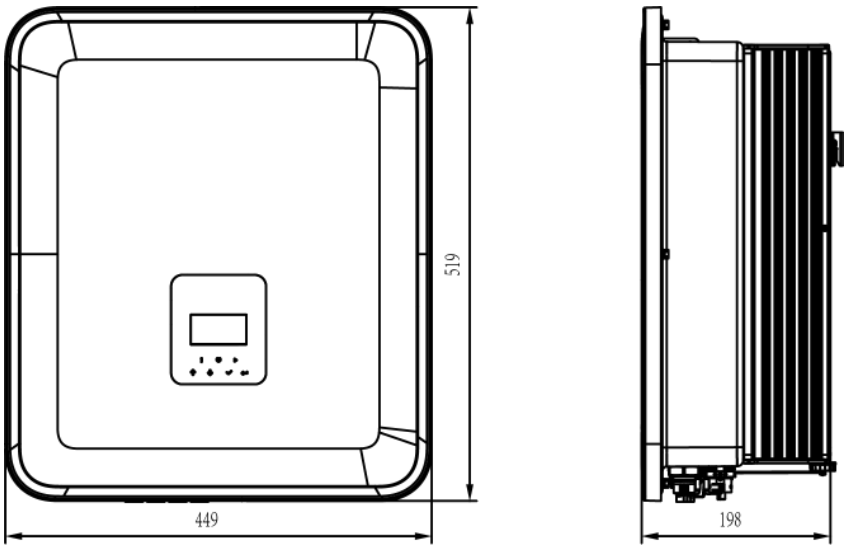

3.3 Terminals of inverter

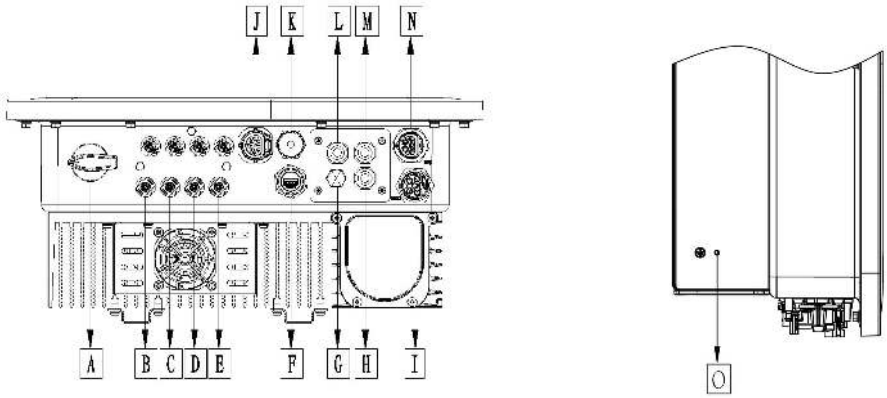

Item	Description	Item	Description
A	DC Switch	I	GRID
B	PV1	J	Meter / RS485
C	PV2	K	BMS
D	PV3	L	DRM
E	Battery Connector	M	PARALLEL2
F	USB / WiFi / GPRS / LAN	N	EPS
G	Waterproof Lock Valve	O	Grounding Screw
H	PARALLEL 1		

Note: Only authorized personnel are permitted to set the connection.

4. Technical Data

4.1 PV Input (For H3 Only)

Model	H3-5.0-E	H3-6.0-E	H3-8.0-E	H3-9.9-E	H3-10.0-E	H3-12.0-E
PV						
Max. Array Power [Wp]	10000	12000	16000	20000	20000	24000
Max. recommended DC power [W]	7500	9000	10400	13000	13000	15000
Max. DC voltage [V]	1000	1000	1000	1000	1000	1000
Nominal DC operating voltage [V]	720	720	720	720	720	720
Max. input current (input A / input B) [A]	14 / 14	14 / 14	26 / 14	26 / 14	26 / 14	26 / 14
Max. short circuit current (input A / input B) [A]	16 / 16	16 / 16	32 / 16	32 / 16	32 / 16	32 / 16
MPPT voltage range [V]	160-950	160-950	160-950	160-950	160-950	160-950
MPPT voltage range (full load) [V]	210-800	250-800	240-800	280-800	280-800	320-800
Start-up voltage [V]	160	160	160	160	160	160
No. of MPP trackers	2	2	2	2	2	2
Strings per MPP tracker	1+1	1+1	2+1	2+1	2+1	2+1

4.2 Battery

Battery	H3-5.0-E AC3-5.0-E	H3-6.0-E AC3-6.0-E	H3-8.0-E AC3-8.0-E	H3-9.9-E AC3-9.9-E	H3-10.0-E AC3-10.0-E	H3-12.0-E
Battery Type	Lithium-Iron-Phosphate (LiFePO4), prismatic cells					
Battery voltage [V]	180-600[1]					
Full AC load Battery voltage [V]	205	250	330	400	410	480
Max. Charge/ discharge current [A]	26.0					
Communication interface	CAN/RS485					

[1]Minimum operation battery voltage is 120V.

4.3 AC Output/Input

Model	H3-5.0-E AC3-5.0-E	H3-6.0-E AC3-6.0-E	H3-8.0-E AC3-8.0-E	H3-9.9-E AC3-9.9-E	H3-10.0-E AC3-10.0-E	H3-12.0-E
AC OUTPUT						
Nominal AC power [VA]	5000	6000	8000	9900	10000	12000
Max. apparent AC power [VA]	5500	6600	8800	9900	11000[2]	13200
Rated grid voltage (AC voltage range) [V]	400V/230VAC;380V/220VAC,3L/N/PE					
Rated grid frequency [Hz]	50 / 60, ±5					
Max. AC current [A] (Per phase)	8.0	9.6	12.8	15	15.2	19.2
Power Factor	1(Adjustable from 0.8 leading to 0.8 lagging)					
Export Control	YES					
AC inrush current [A]	15A@0.5ms					
Max. output fault current [A]	150A@0.5ms					
Max. output overcurrent protection [A]	45					
THDI	<3%@rated power					
AC INPUT						
Max. AC power [VA]	10000	12000	16000	16000	16000	16000
Rated grid voltage (AC voltage range) [V]	400V/230VAC;380V/220VAC,3L/N/PE					
Rated grid frequency [Hz]	50 / 60, ±5					
Max. AC current [A] (Per phase)	15.2	18.2	24.2	24.2	24.2	24.2
AC inrush current [A]	15A@0.5ms					
Power Factor	1(Adjustable from 0.8 leading to 0.8 lagging)					

[2] At the time of Belgian safety regulation, the maximum output apparent power of H3-10.0-E is 10kVA.

4.4 EPS Output

Model	H3-5.0-E AC3-5.0-E	H3-6.0-E AC3-6.0-E	H3-8.0-E AC3-8.0-E	H3-9.9-E AC3-9.9-E	H3-10.0-E AC3-10.0-E	H3-12.0-E
EPS OUTPUT (WITH BATTERY)						
Max. apparent AC Power [VA]	5000	6000	8000	9900	10000	12000
Peak apparent AC Power [VA] (60s)	10000	12000	14000	15000	15000	15000
Rated output voltage [V]	400V/230VAC; 3L/N/PE					
Rated grid Frequency [Hz]	50/60	50/60	50/60	50/60	50/60	50/60
EPS Max current [A] (Per phase)	7.2	8.7	11.6	14.3	14.5	17.4
Power Factor	1(Adjustable from 0.8 leading to 0.8 lagging)					
Parallel operation	Yes@max10 Pcs					
Switch time	<20ms					
THDV	<3%@rated power					

4.5 Efficiency and Protection

Model	H3-5.0-E AC3-5.0-E	H3-6.0-E AC3-6.0-E	H3-8.0-E AC3-8.0-E	H3-9.9-E AC3-9.9-E	H3-10.0-E AC3-10.0-E	H3-12.0-E
EFFICIENCY						
MPPT efficiency	99.90%	99.90%	99.90%	99.90%	99.90%	99.90%
Max. Efficiency	97.80%	97.80%	98.00%	98.00%	98.00%	98.00%
Euro-efficiency	97.20%	97.20%	97.30%	97.30%	97.30%	97.30%
PROTECTION						
PV reverse polarity protection	YES					
Battery reverse protection	YES					
Anti-islanding protection	YES					
Output short protection	YES					
Leakage current protection	YES					
Insulation Resistor Detection	YES					
Over Voltage category	III (AC side), II (DC side)					
Reverse connect protection	YES					
Over-current protection /Over-temperature protection	YES					
AC/DC surge protection	Type II					
AFCI protection※	optional					
DC switch	optional					
String monitoring function	optional					

Note: '※' is under development.

4.6 General Data

DIMENSION AND WEIGHT		
Dimensions (W*H*D) [mm]	449*519*198	
Net Weight [kg]	28	
Cooling	Natural	FAN cooling
Inverter topology	Non-isolated	
Communication interface	Meter, WiFi/GPRS/LAN (optional), DRM, USB, BMS(CAN&RS485), RS485	
LCD display	Backlight 16*4 character	
ENVIRONMENT LIMIT		
Installation	wall-mounted	
Ingress protection	IP65 (for outdoor use)	
Inverter operating temperature range [°C]	-25…... +60 (derating at +45°C)	
Storage/Operation relative humidity	0%-100% (without condensation)	
Altitude [m]	<2000	
Protective class	I	
Storage temperature [°C]	-40…… +70	
Standby consumption [W]	15W	
Idle mode	YES	
Button	Capacitive touch sensor *4	
Buzzer	1, inside (EPS & Earth fault)	

5. Installation

5.1 Check for Physical Damage

Make sure the inverter is intact during transportation. If there is any visible damage, such as cracks, please contact your dealer immediately.

5.2 Packing List

Open the package and take out the product, please check the accessories first. The packing list shown as below.

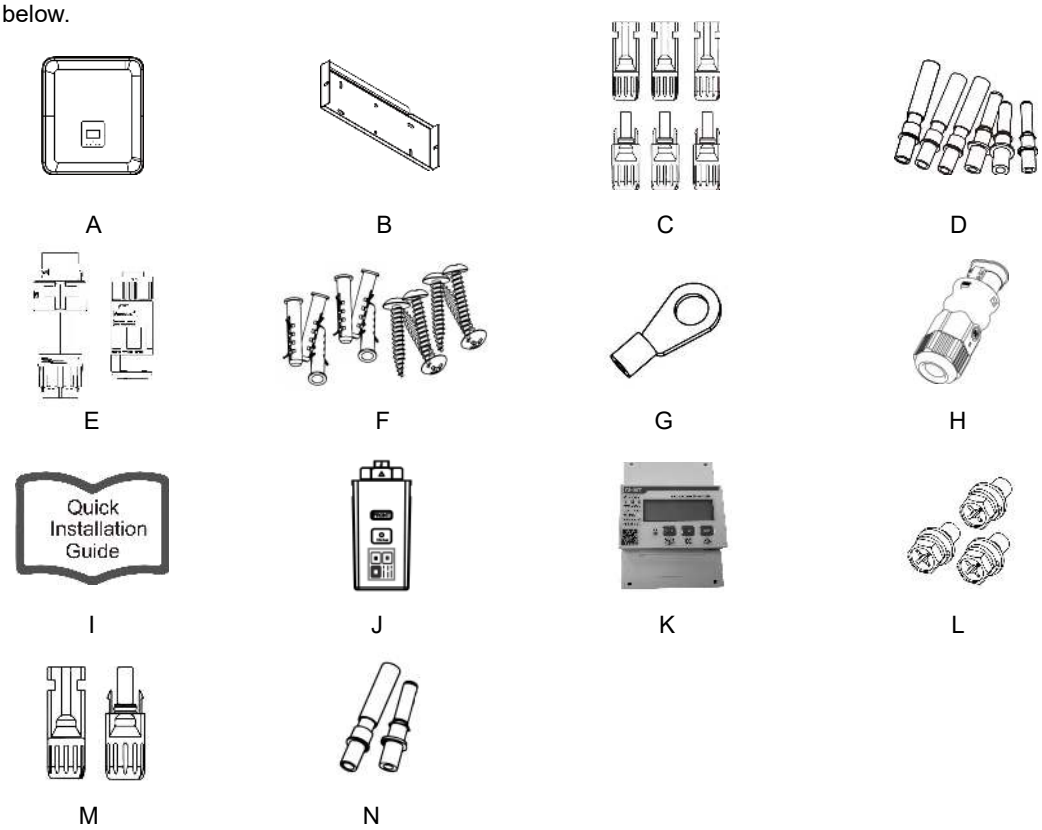

Object	Quantity	Description	Object	Quantity	Description
A	1	Inverter	H	1	Communication connector
B	1	Brackets	I	1	Quick installation guide
C	6	PV connectors (Only for H3) (3*positive, 3*negative)	J	1	WiFi/GPRS/LAN (Optional)
D	6	PV pin contacts (Only for H3) (3*positive, 3*negative)	K	1	3ph Meter <80A
E	2	AC connectors	L	3	Hexagonal screws
F	12	6*Expansion tubes & 6*Expansion screws	M	2	Battery connectors (1*positive, 1*negative)
G	1	Earth terminal	N	2	Battery pin contacts (1*positive, 1*negative)

5.3 Mounting

- Installation Precaution

Make sure the installation site meets the following conditions:

- Not in direct sunlight.
- Not in areas where highly flammable materials are stored.
- Not in potential explosive areas.
- Not in the cool air directly.
- Not near the television antenna or antenna cable.
- Not higher than altitude of about 2000m above sea level.
- Not in environment of precipitation or humidity (> 95%).
- Under good ventilation condition.
- The ambient temperature in the range of -25°C to +60°C.
- The slope of the wall should be within +5*.
- The wall hanging the inverter should meet conditions below:

A. Solid brick/concrete, or strength equivalent mounting surface;

B. Inverter must be supported or strengthened if the wall's strength isn't enough (such as wooden wall, the wall covered by thick layer of decoration).

Please avoid direct sunlight, rain exposure, snow laying up during installation and operation.

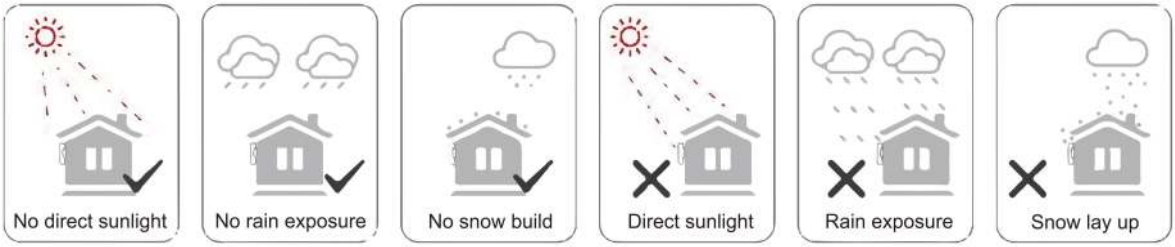

- Space Requirement

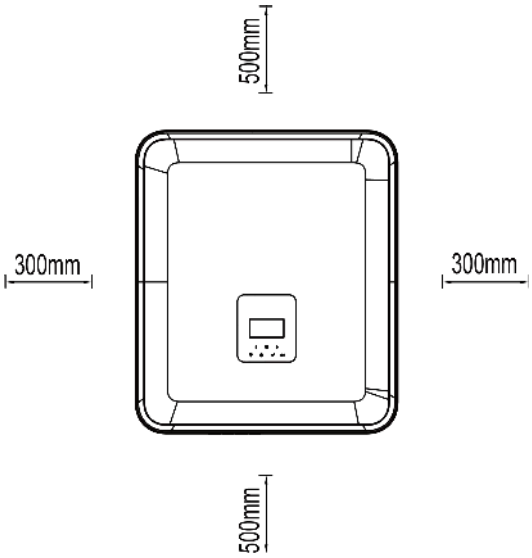

Position	Min Distance
Left	300mm
Right	300mm
Top	500mm
Bottom	500mm

- Mounting Steps

Tools required for installation:

- Manual wrench;
- Electric drill (drill bit set 8mm);
- Crimping pliers;
- Stripping pliers;
- Screwdriver.

- Installation angle requirements: ● Do not tilt the energy storage forward, horizontally, upside down, backward and sideways.
- Installation space requirements:
- When installing energy storage, ensure that there are no other equipment and flammable and explosive materials around, and reserve enough space to ensure the installation heat dissipation and safety isolation requirements. ● During wall-mounted installation, no items are allowed to be placed under the energy storage.

1. Fix the bracket on the wall

- Choose the place you want to install the inverter. Place the bracket on the wall and mark the position of the 6 holes from bracket.

⚠ DANGER
Before drilling, please make sure to avoid the water and electricity lines embedded in the wall to avoid danger.

- The dimensions on the back of the machine are as follows:

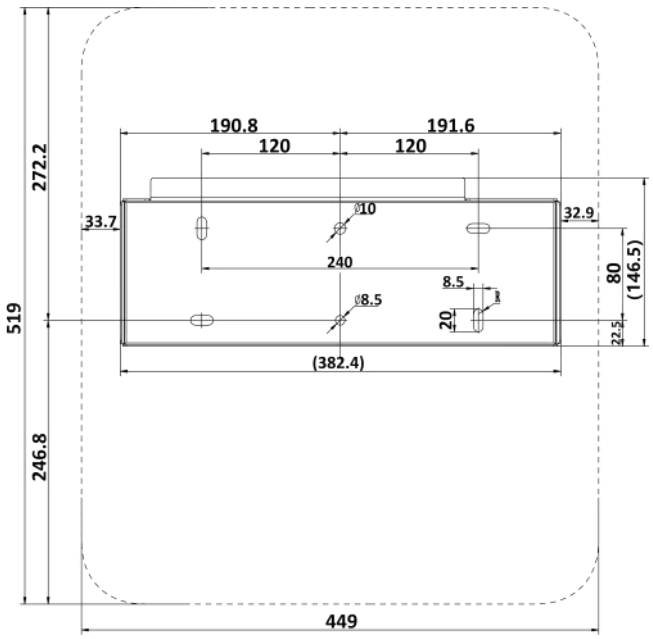

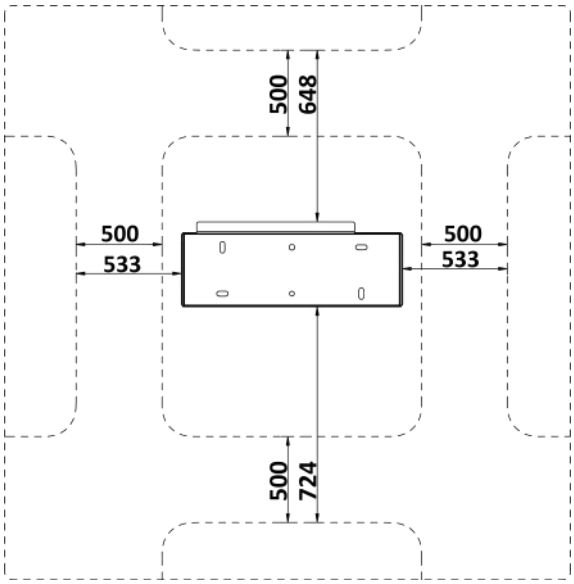

- Before drilling holes, please ensure the distance between the machine and nearby objects.

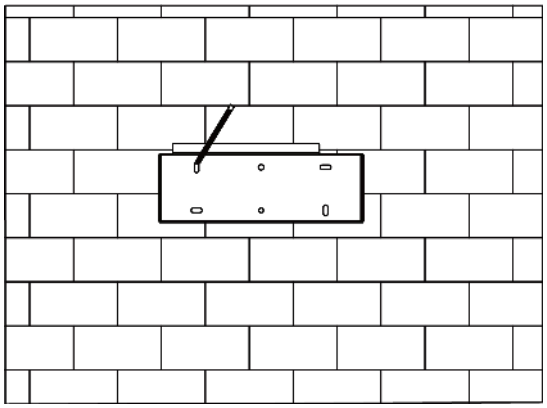

- Drill holes with electric drill, make sure the holes are at least 50mm deep and 8mm wide, and then tighten the expansion tubes.

⚠ CAUTION
Please pay attention to safety when using the tools. Unsafe use of the drilling tools may cause damage to the body.

- Please select solid brick-concrete structure and concrete wall for installation location. If other types of wall are selected, the wall must be made of fire-retardant materials and meet the load bearing requirements of the equipment.

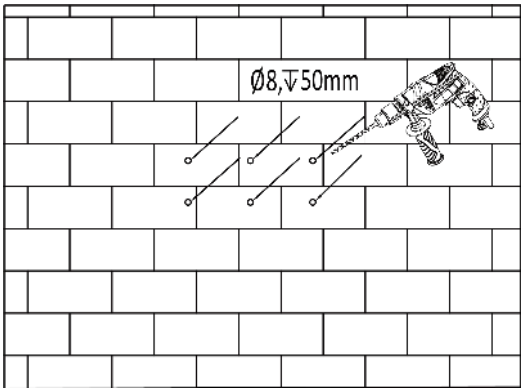

- Insert the expansion tubes into the holes and tighten them. Install the bracket with the expansion screws.

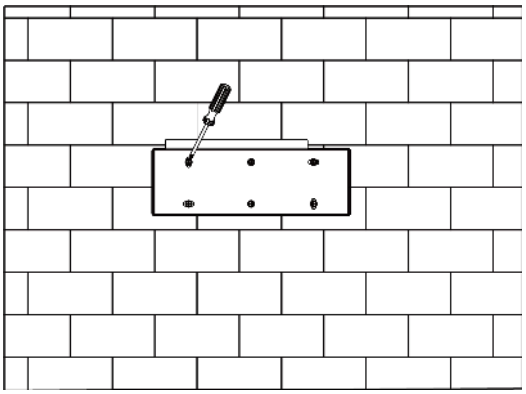

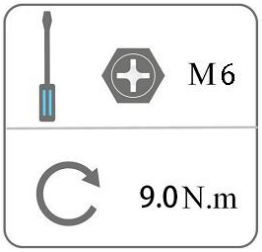

2. Match the inverter with wall bracket

- Mount the inverter to the bracket. Secure the inverter with the M5 screw and washer.

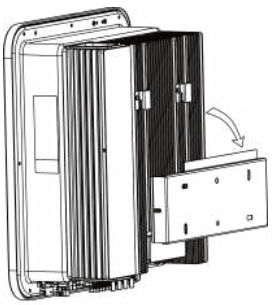

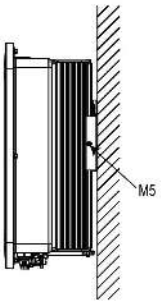

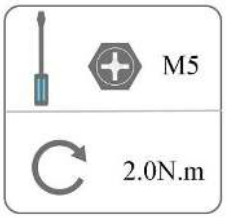

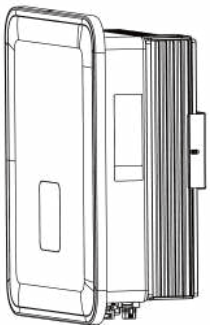

6. Electrical Connection

6.1 circuit overview

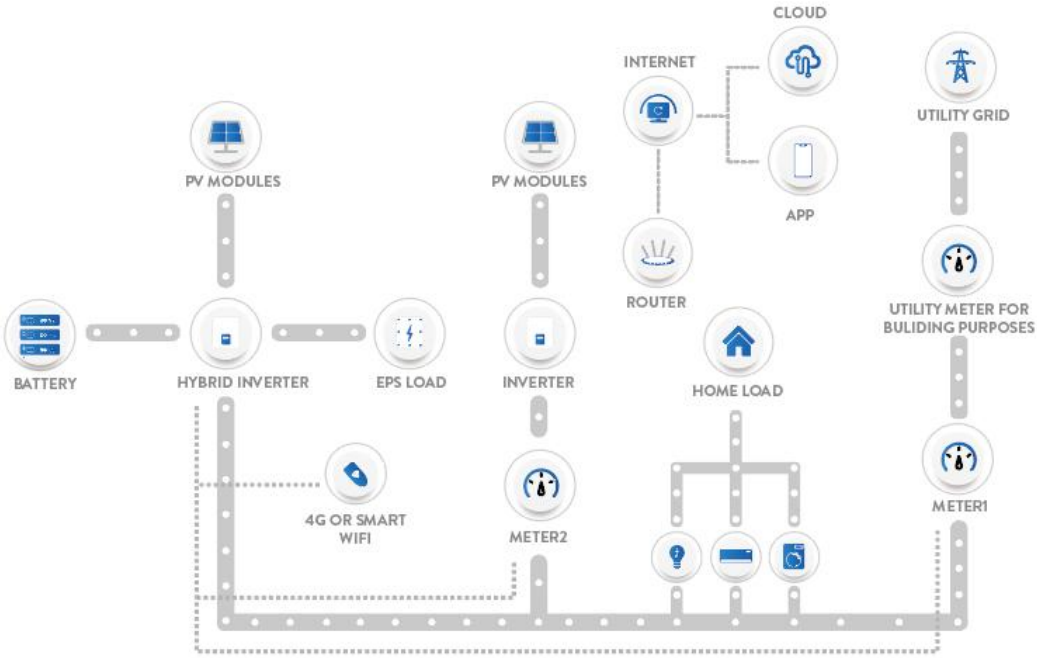

system overview

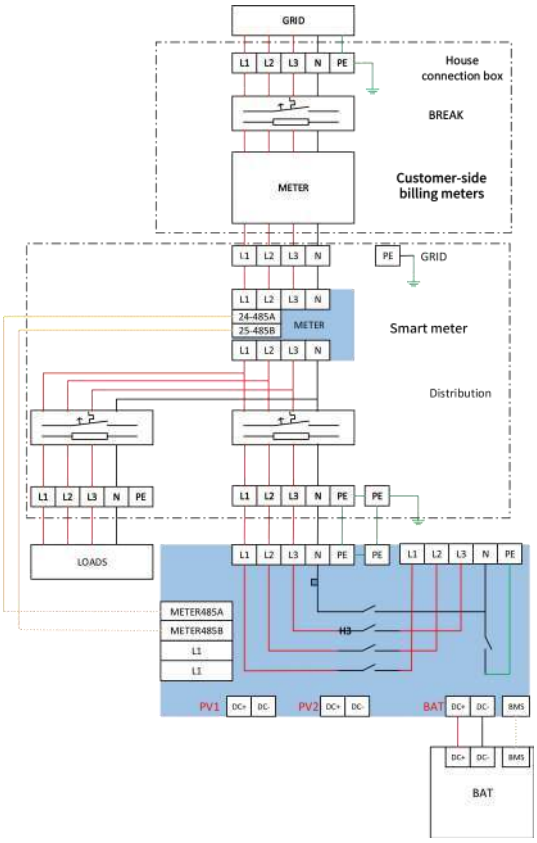

6.2 PV Connection (For H3 Only)

Step 1: PV String Connection

H3 series 5-6kw inverters can be connected with 1 -string of PV modules. Please select suitable PV modules with high reliability and quality. Open circuit voltage of module array connected should be less than 1000V, and operating voltage should be within the MPPT voltage range.

For H3-8.0-E, H3-10.0-E, H3-12.0-E, each pair of PV terminals is corresponding to an independent PV string. PV input PV1 and PV2 connect to MPPT1 and PV3 connect to MPPT2. For the best use of PV power PV1 and PV2 should be the same in PV string structure, including the type, number, tilt, and orientation of the PV modules.

NOTE
Note! Please choose a suitable external DC switch if the inverter does not have a built-in DC switch.
⚠ WARNING
Warning! PV module voltage is very high and within a dangerous voltage range, please comply with the electric safety rules when connecting.
⚠ WARNING
Warning! Please do not make PV positive or negative to ground!
NOTE
Note! PV modules: Please ensure they are the same type, have the same output and specifications, are aligned identically, and are tilted to the same angle. In order to save cable and reduce DC loss, we recommend installing the inverter as near to the PV modules as possible.

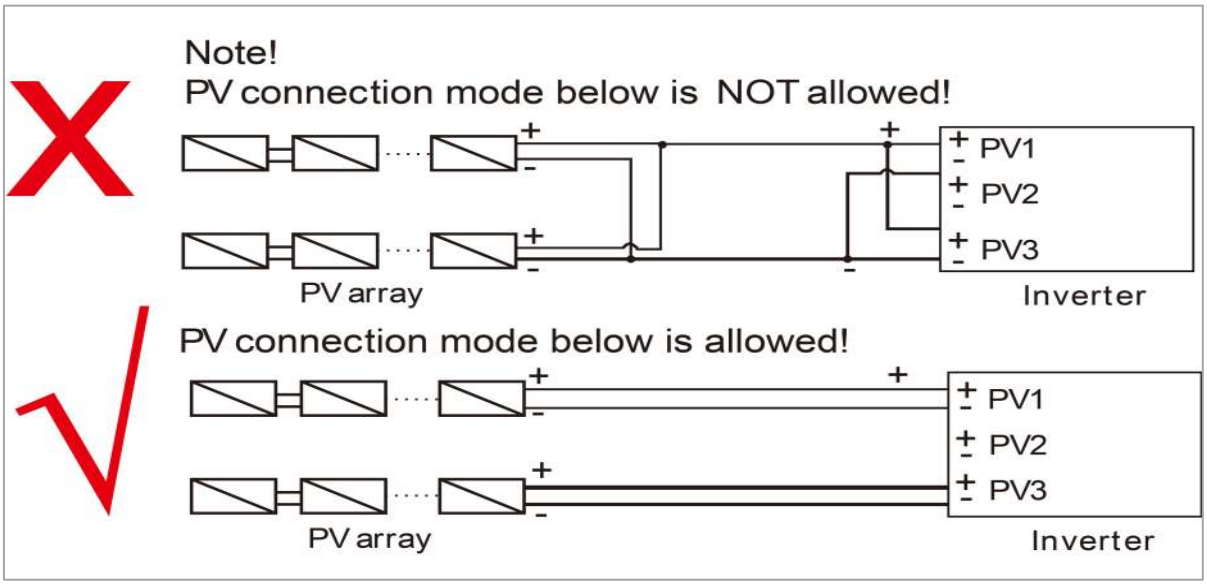

Step 2: PV Wiring

- Turn off the DC switch.
- Choose 12 AWG wire to connect the PV module.
- Trim 6mm of insulation from the wire end.

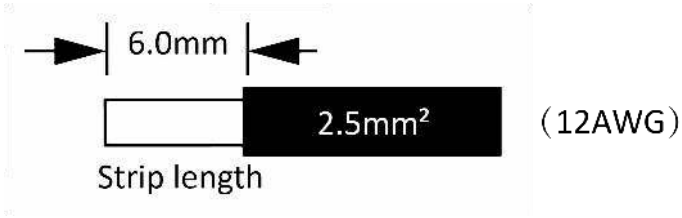

- Separate the DC connector (PV) as below.

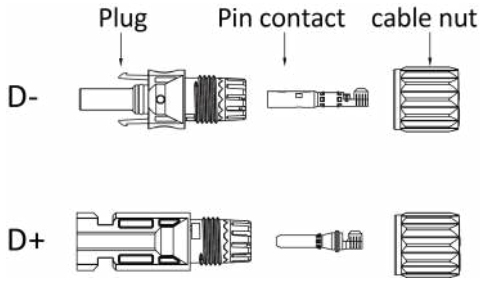

NOTICE
When making PV terminals, please make sure that the copper cores of PV positive and PV negative terminals and the copper cores on the inverter can be inserted, and use a multimeter to measure whether the positive and negative terminals are correct, otherwise the machine may not work normally or individual strings may not work.

The maximum open-circuit voltage of PV should be less than 900V, otherwise an error may be reported when mppt cannot be traced.

- Insert striped cable into pin contact and ensure all conductor strands are captured in the pin contact.
- Crimp pin contact by using a crimping plier. Put the pin contact with striped cable into the corresponding crimping pliers and crimp the contact.

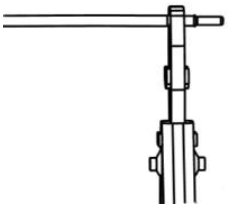

- Insert pin contact through the cable nut to assemble into back of the male or female plug. When you feel or hear a “click” the pin contact assembly is seated correctly.

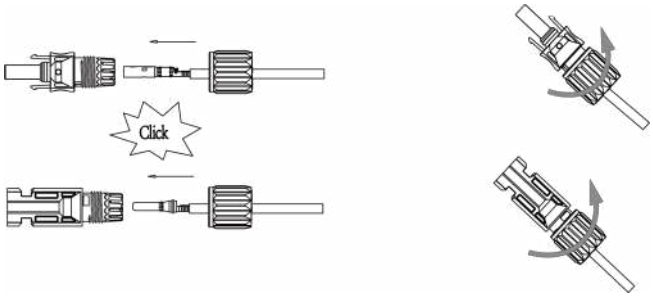

- Unlock the DC connector

⚠ DANGER

Before separating the DC connector, make sure that there is no current on the DC connector. You can measure it with current clamp or disconnect the DC switch, otherwise serious safety accidents may occur. Make sure that the power cable connected to the inverter is connected vertically and that the vertical length is greater than 30 cm. If the cable is bent close to the terminals, it may cause poor line contact and result in burnt terminals.

- Use the specified wrench tool.
- When separating the DC + connector, push the tool down from the top.
- When separating the DC - connector, push the tool down from the bottom.
- Separate the connectors by hand.

6.3 Battery Connection

- Turn off the DC switch.
- Choose 8 AWG wire to connect the battery.
- Trim 6mm of insulation from the wire end.

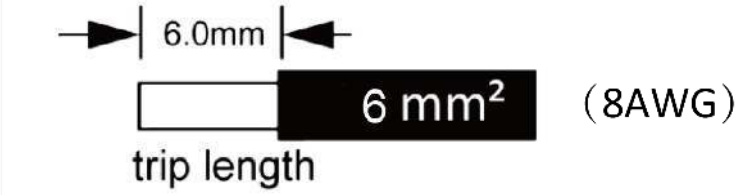

- Separate the DC connector (battery) as below.

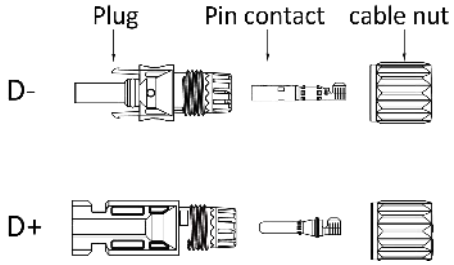

NOTICE

Provides matching battery power harness and communication harness. Please use matching harness. The matched battery power harness and communication harness are in the battery packaging box.

- Insert striped cable into pin contact and ensure all conductor strands are captured in the pin contact.
- Crimp pin contact by using a crimping plier. Put the pin contact with striped cable into the corresponding crimping pliers and crimp the contact.

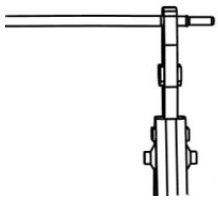

- Insert pin contact through the cable nut to assemble into back of the male or female plug. When you feel or hear a “click” the pin contact assembly is seated correctly.

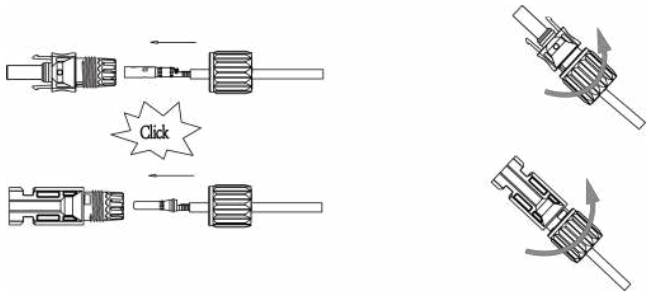

- Unlock the DC connector

⚠ DANGER
Before disconnecting the DC connector, make sure that there is no current on the DC connector. You can use the current clamp to measure or disconnect the battery switch, otherwise serious safety accidents may occur. At the same time, the harness on the battery cannot be reversed or shorted, which will cause irreparable damage to the battery or inverter.

- Use the specified wrench tool.
- When separating the DC + connector, push the tool down from the top.
- When separating the DC - connector, push the tool down from the bottom.
- Separate the connectors by hand.

6.4 Grid Connection

Step 1: Grid String Connection

H3/AC3 series inverters are designed for three-phase grid. Per voltage range is 220/230/240V; frequency is 50/60Hz. Other technical requests should comply with the requirement of the local public grid.

Model (kW)	5.0	6.0	8.0	9.9	10.0	12.0
Cable (ON-GRID)	4.0-6.0mm²	4.0-6.0mm²	4.0-6.0mm²	5.0-6.0mm²	5.0-6.0mm²	5.0-6.0mm²
Cable (EPS)	4.0-6.0mm²	4.0-6.0mm²	4.0-6.0mm²	5.0-6.0mm²	5.0-6.0mm²	5.0-6.0mm²
Micro-Breaker	32A	32A	32A	63A	63A	63A

⚠ WARNING

WARNING!

A micro-breaker for max output overcurrent protection device shall be installed between inverter and grid, and the current of the protection device is referred to the table above, any load SHOULD NOT be connected with the inverter directly.

Step 2: Grid Wiring

- Check the grid voltage and compare with the permitted voltage range (refer to technical data).
- Disconnect the circuit-breaker from all the phases and secure against re-connection.
- Trim the wires:
  - Trim all the wires to 52.5mm and the PE wire to 55mm.
  - Use the crimping pliers to trim 12mm of insulation from all wire ends as below.

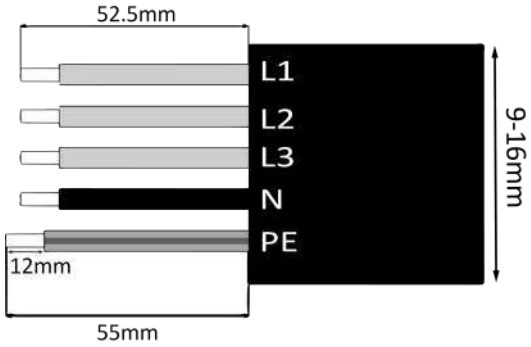

L1/L2/L3: Brown/Red/Green or Yellow Wire

N: Blue/Black Wire

PE: Yellow & Green Wire

Note: Please refer to local cable type and color for actual installation.

A. EPS Wiring

- Set the parts on the cable.

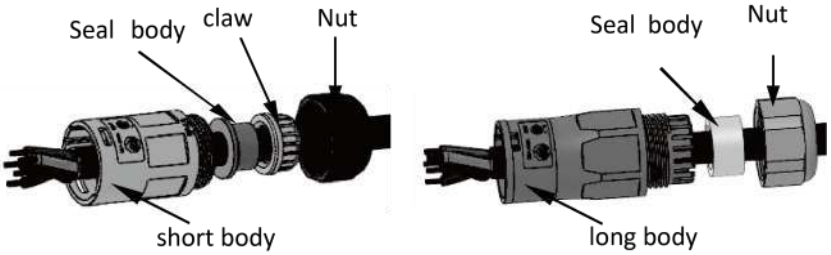

- Crimp wires, screw twisting torque 0.8+/-0.1N·m.

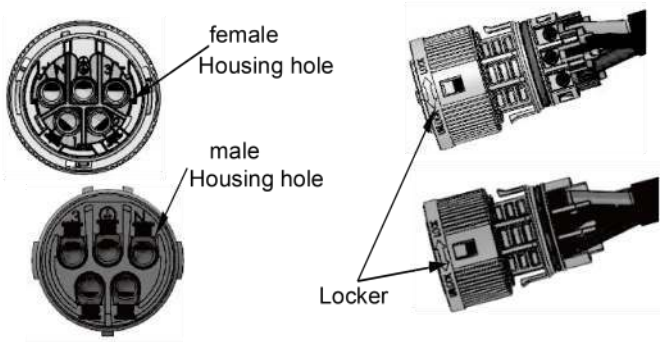

- Push Housing into Body.

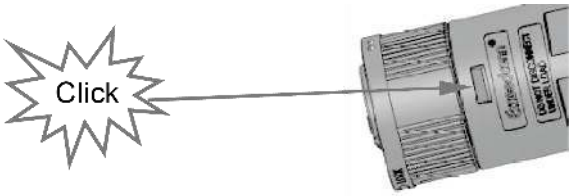

- Put the sealing body and yarn trapper into the main body, screw the lock nut into the main body, and the torque is (2.5 + / - 0.5N·m).

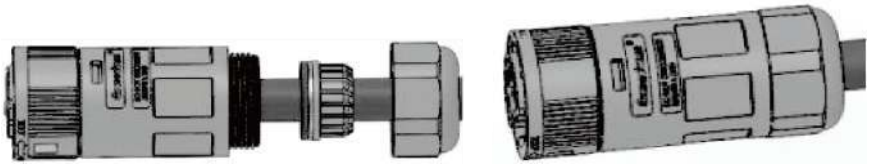

- Insert the male end into the female end. For the rotation direction of the lock, please refer to the LOCK mark on the assembly.

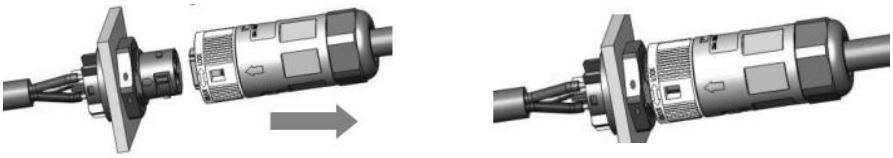

- Remove the EPS connector： Press the bayonet with a small screwdriver or the unlock tool. Rotate the sleeve referring to the UNLOCK mark on the assembly, then pull it out.

B. GRID Wiring

NOTICE
The wiring of the power grid must be connected to the N line, otherwise the machine will report an error and cannot work normally. The SW BUS Volt fault will appear. The method to detect whether the N line is connected is to measure whether the voltage of each phase is within the normal working voltage range separately. Then disconnect one of the live wires and check whether the voltage of the other two phases is within the range. If it is within the range, it means that the N wire is connected. If, after disconnecting the live wire, the voltage of the other two phases changes, it means that the N wire is not connected.

- Separate the ON-GRID plug into three parts as below.
  - Hold middle part of the female insert, rotate the back shell to loosen it, detach it from female inset.
  - Remove the cable nut (with rubber insert) from the back shell.

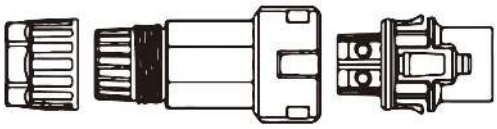

- Slide the cable nut and then Install the back shell onto the cable.

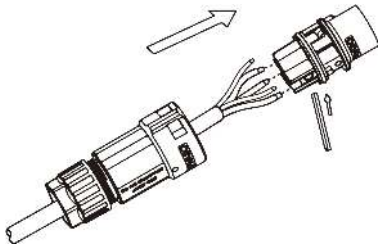

- Push the threaded sleeve into the socket, tighten up the cap on the terminal.

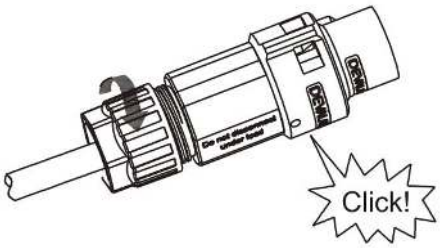

- Push the threaded sleeve to connection terminal until both are locked tightly on the inverter.

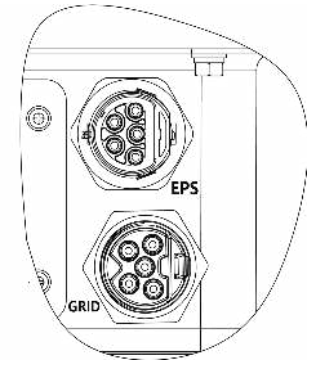

- Remove the GRID connector: Press the bayonet out of the slot with a small screwdriver or the unlock tool and pull it out, or unscrew the threaded sleeve, then pull it out.

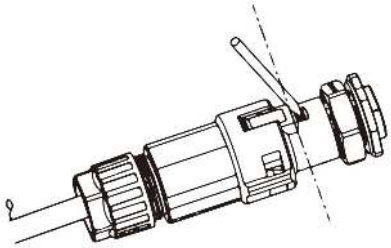

6.5 Earth Connection

Trim 6mm of insulation from the wire end.

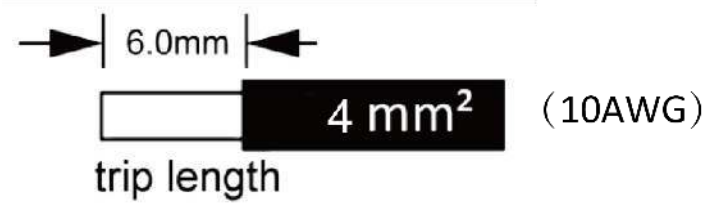

- Insert striped cable into earth terminal and ensure all conductor strands are captured in the earth terminal.
- Crimp earth terminal by using a crimping plier. Put the earth terminal with striped cable into the corresponding crimping pliers and crimp the contact.

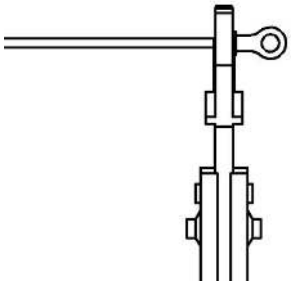

Use the crimping pliers to press the ground cable into the ground terminal, screw the ground screw with screwdriver as shown below:

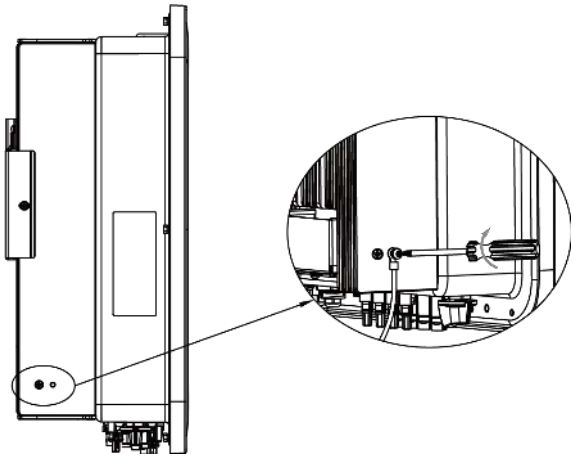

6.6 Electrical Connection

A. Communication Device Installation (Optional)

H3/AC3 series inverters are available with multiple communication options such as WiFi-, GPRS-, LAN- or 4G-Dongle, RS485 and Smartmeter with an external device.

Operating information like output voltage, current, frequency, fault information, etc., can be monitored locally or remotely via these interfaces.

- **WiFi/ GPRS/ LAN (Optional)**

The inverter has an interface for WiFi/GPRS/LAN/4G-Dongle that allow this device to collect information from inverter; including inverter working status, performance etc., and update that information to monitoring platform (the WiFi/GPRS/LAN4G-Dongle is available to purchase from your local supplier).

Connection steps:

1. For GPRS device: Please insert the SIM Card (please refer to the GPRS product manual for more details).
2. Plug the WiFi/ GPRS/ LAN 4G-Dongle into “WiFi/GPRS/LAN 4G-Dongle” port at the bottom of the inverter.
3. For WiFi device: Connect the WiFi with the local router, and complete the WiFi configuration (please refer to the WiFi product manual for more details).
4. Set-up the site account on the monitoring platform (please refer to the monitoring user manual for more details).

- **wifi configuration for smart wifi**

WiFi Stick Installation

Alarm: The collector can only be plugged into the inverter, not any other device.

Step 1: For USB

Rotate the lock, make sure the triangle mark is on the front and centered. Plug the Smart WiFi into WiFi/GPRS port under the bottom (underside) of the inverter. Tighten the nut clockwise as following.

Step 2:

Power on the inverter (in accordance with the start-up procedure detailed in the inverter installation manual).

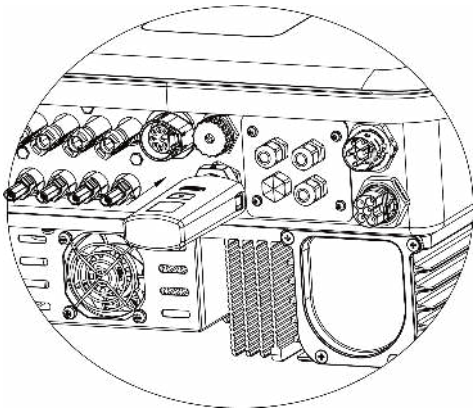

APP Installation：

Scan the QR Code below to download and install the Cloud APP on your smartphone.

HUAWEI AppGallery | Google Play | Apple App Store

Configuration：

Note: The module is powered on and started, please wait for one minute to start the WiFi Config.

Web Configuration.

Step 1:

Connect your mobile device with Smart WiFi. The SSID of the Smart WiFi is ‘W-xxxxx’ and the password is ‘mtmt2020’.

Step 2:

After connecting successfully. Open browser and enter ‘192.168.1.1’ on the address bar on top.

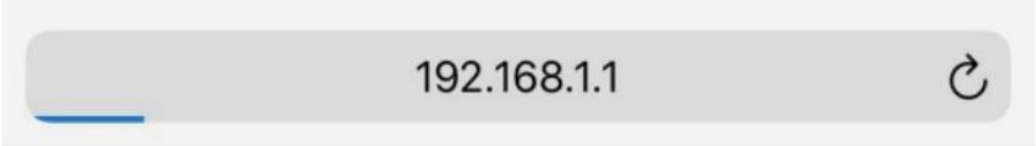

Step 3:

Drop down the WiFi SSID menu to find house router and input the house router’s password. Click ‘Save’.

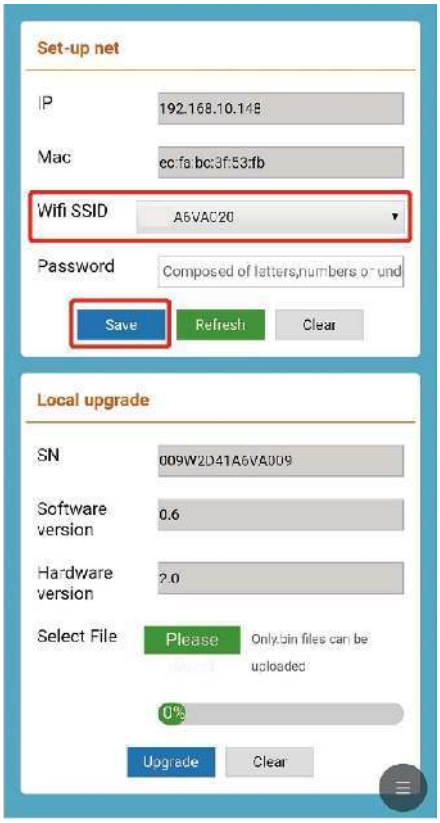

APP Configuration：

Step 1:

Open the APP, click "Local Distribution Network" on the login page.

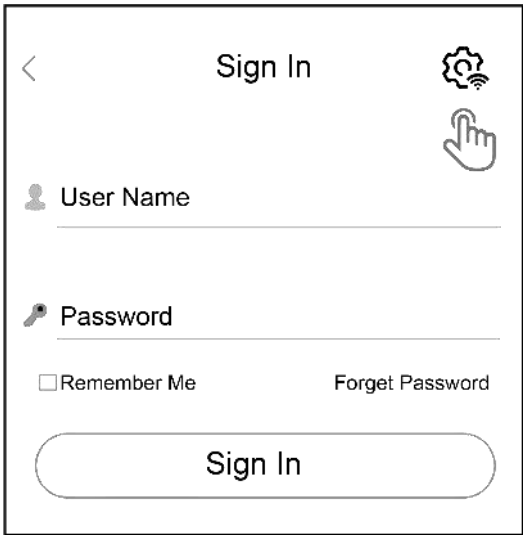

Then click “Wifi Config”.

Or sign in app, click on the “me” page. Then click “WiFi Config”.

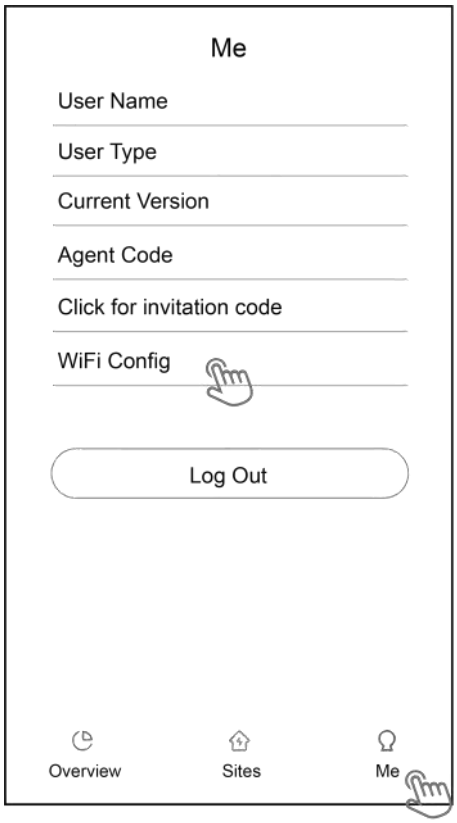

Step 2:

Please scan the "SN" on the collector.

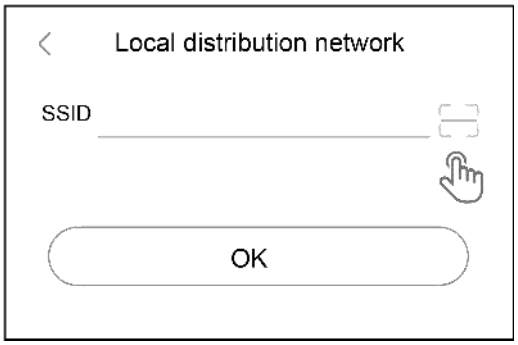

Step 3:

Connect your mobile device with Smart WiFi. The SSID of the Smart WiFi is ‘W-xxxxx’ and the password is ‘mtmt2020’.

- **Meter/RS485**

The PIN definitions of Meter/485 interface are as below.

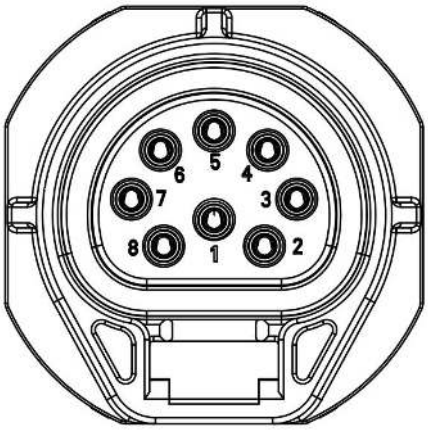

PIN	1	2	3	4	5	6	7	8
Definition	Logger 485A	Logger 485B	Meter 485B	Meter 485A	GND	GND	RY_ CON	+12V

In the old version of the machine, the signal of pin 5 and pin 6 is suspended, not GND, which will affect the wiring mode of the offline parallel function. Please check the wiring on the offline parallel side.

The +12V has limited power and is only suitable for connecting to the EPS 3PH-4UNIT, it cannot be used to connect to other external devices and power supplies, and damage caused by incorrect connection is not the responsibility of .

Note:

- Compatible Meter type: DTSU666 (CHINT).

Please check and configure the meter before use:

Addr: 1;

Baud: 9600

Protocol：n.1

Please refer to the user manual of electricity meter for detailed setting steps.

- RS485

RS485 is a standard communication interface which can transmit the real time data from inverter to PC or other monitoring devices.

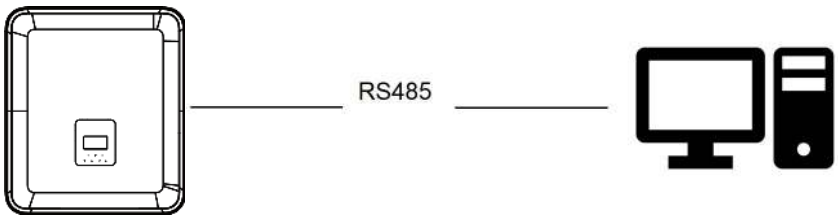

- Meter

The inverter has integrated export limitation functionality. To use this function, a power meter must be installed. For Meter installation, please install it on the grid side.

NOTICE
When connecting the electricity meter, please make sure that the way of the electricity meter is correct, otherwise it will affect the size of the load obtained by the inverter and affect the normal operation of the inverter. When the battery is available and can work normally, the machine provides the self-test function in the direction of the meter, which can be set in the meter interface.

Export control setting:

Settings → On-Grid Parm → Export Control → xxxxxW

The electricity meter is connected as follows:

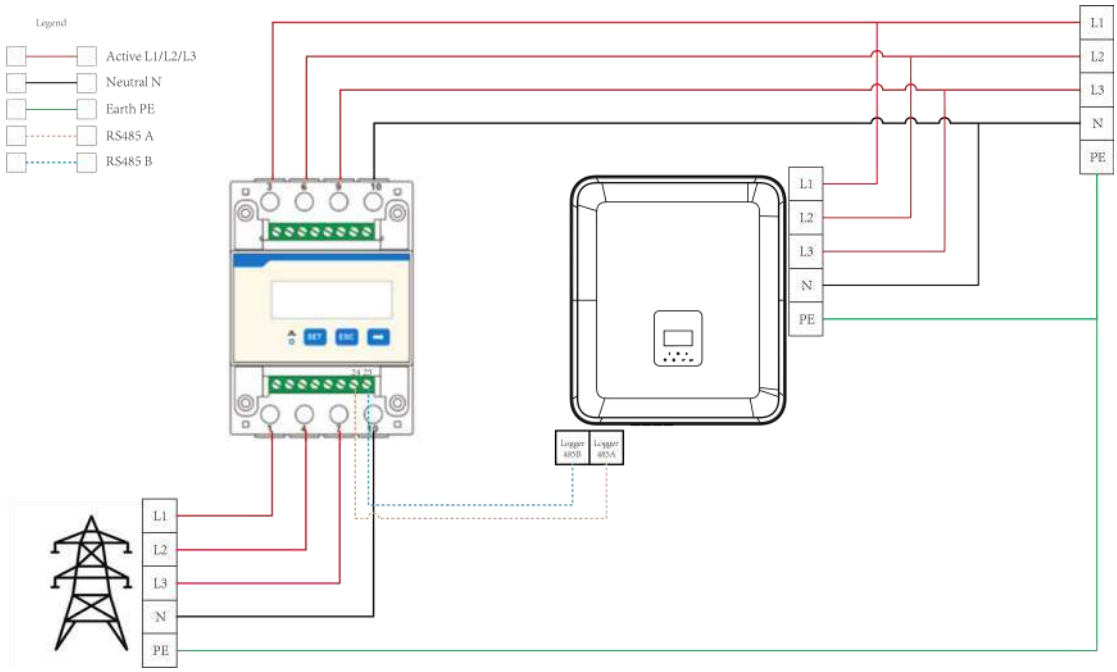

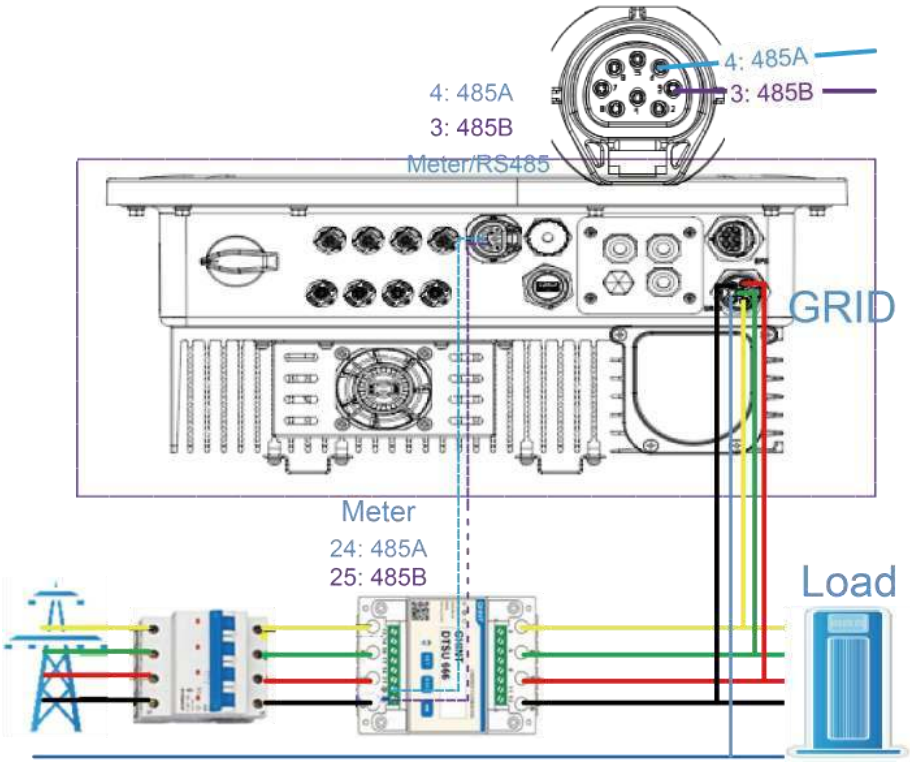

Meter connection：

Meter Connection Diagram

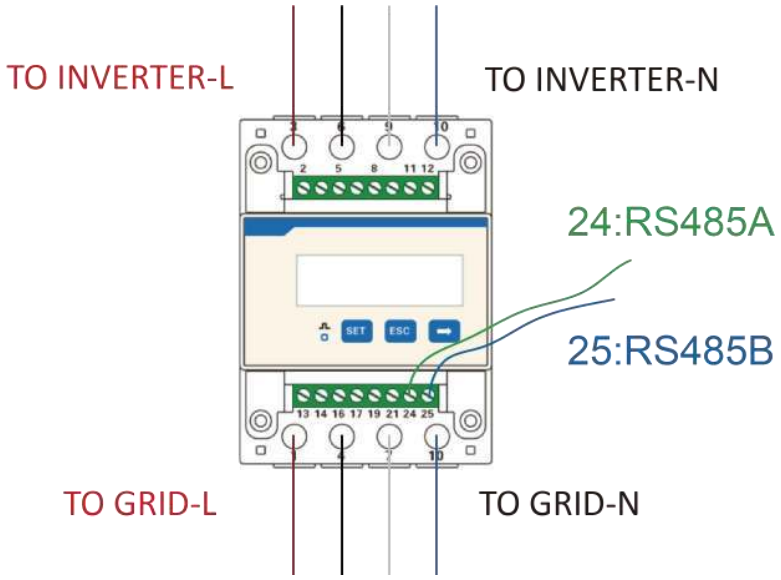

Insert L1/L2/L3/N wires and RS485A/B cable into the meter. Please refer to the meter wiring diagram on side of meter itself.

Connect RS485A to the 24 pins of the meter port and RS485B to the 25 pins of the meter port. Please use twisted pair cable.

The definition of the meter port is as follows:

PIN / Port	1	2	3	4	5	6	7	8
Meter/ RS485	485A	485B	Meter 485B	Meter 485A	GND	GND	RY_ CON	+12V

The built-in meter is a regular meter, and if a CT meter is required, additional purchase is required.

CT Meter Connection Diagram:

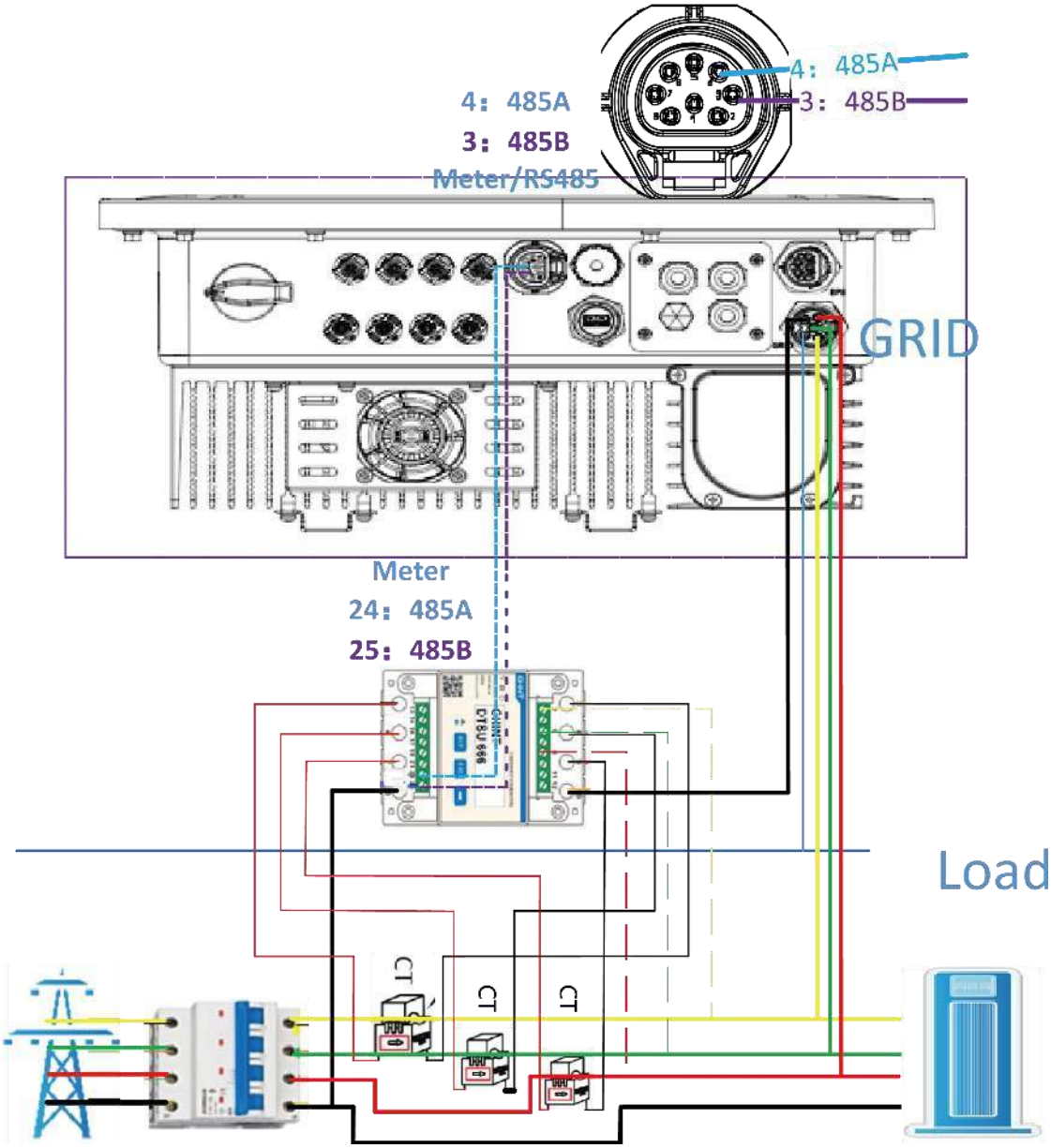

Insert L1/L2/L3/N wires, CT and RS485A/B cable into the meter. Please refer to the meter wiring diagram on side of meter itself.

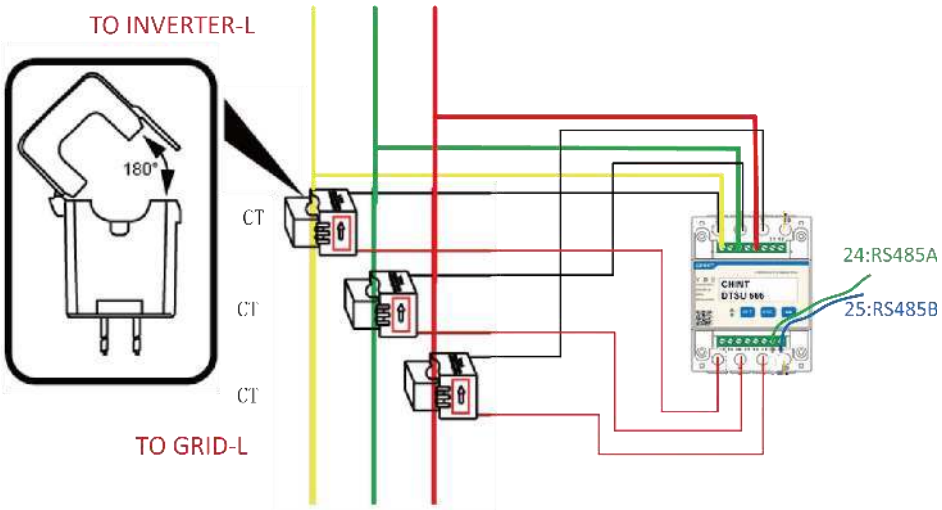

Notes: The 2,5,8 of the CT meter are connected to the three live wires L1, L2, and L3 respectively.

Connect RS485A to the 24 pins of the meter port and RS485B to the 25 pins of the meter port. Please use twisted pair cable.

The definition of the meter port is as follows:

PIN / Port	1	2	3	4	5	6	7	8
Meter/ RS485	485A	485B	Meter 485B	Meter 485A	GND	GND	RY_ CON	+12V

The transformation ratio setting of a CT meter needs to be consistent with the transformation ratio of a CT meter. The transformation ratio setting method.

for a CT meter is as follows:

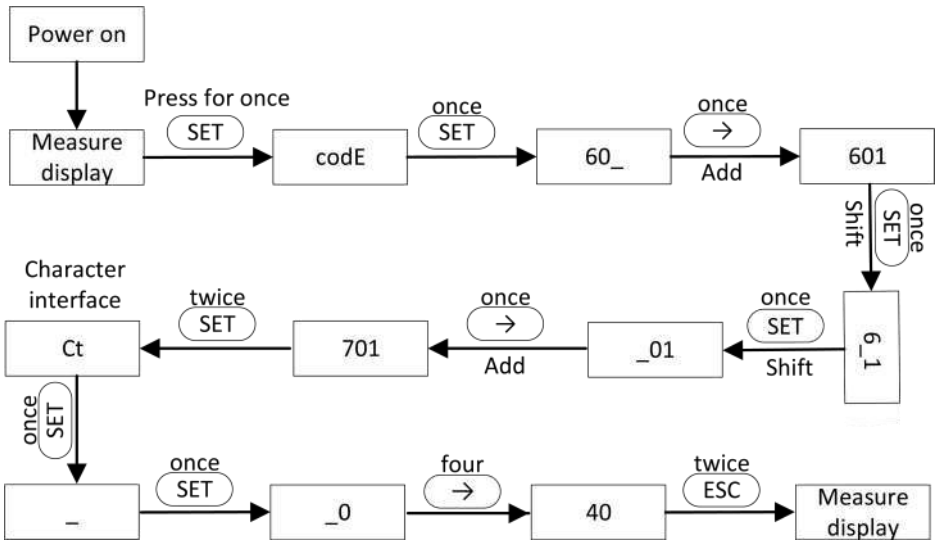

Schematic diagram of H3 system 0 grid connection:

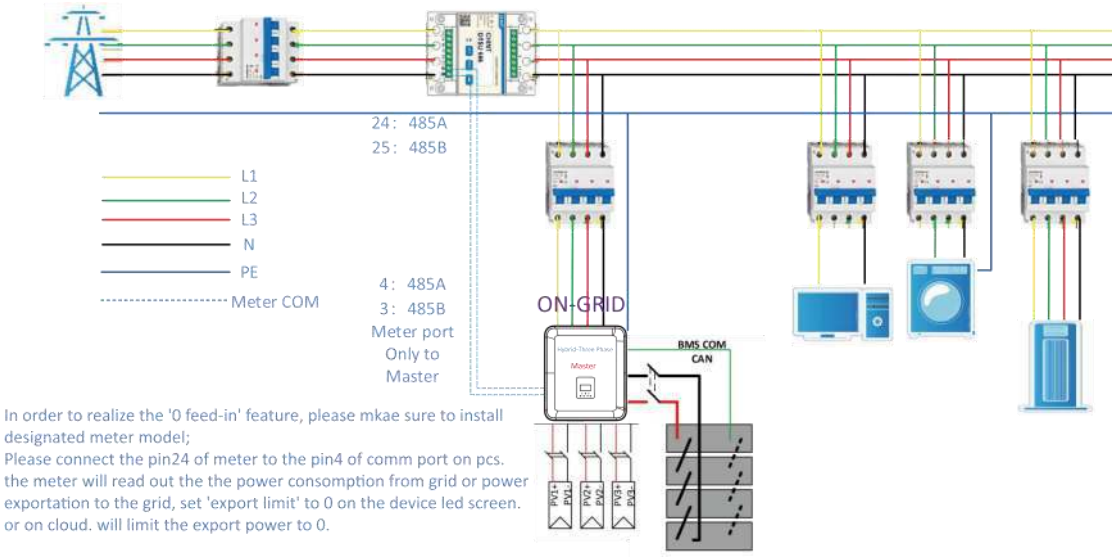

The inverter can also provide the use of two meters, using the second meter to read the power generated by another machine, where the address of the second meter is 2. When using the second meter function, you need to turn on the second meter function.

NOTICE
We only supply one meter. If you need a second meter, please consult your local installer or distributor.

The address of the second meter is 2. Please ensure that the address is 2, otherwise the communication of the first meter will be affected, and the output and monitoring data of the inverter will be affected.

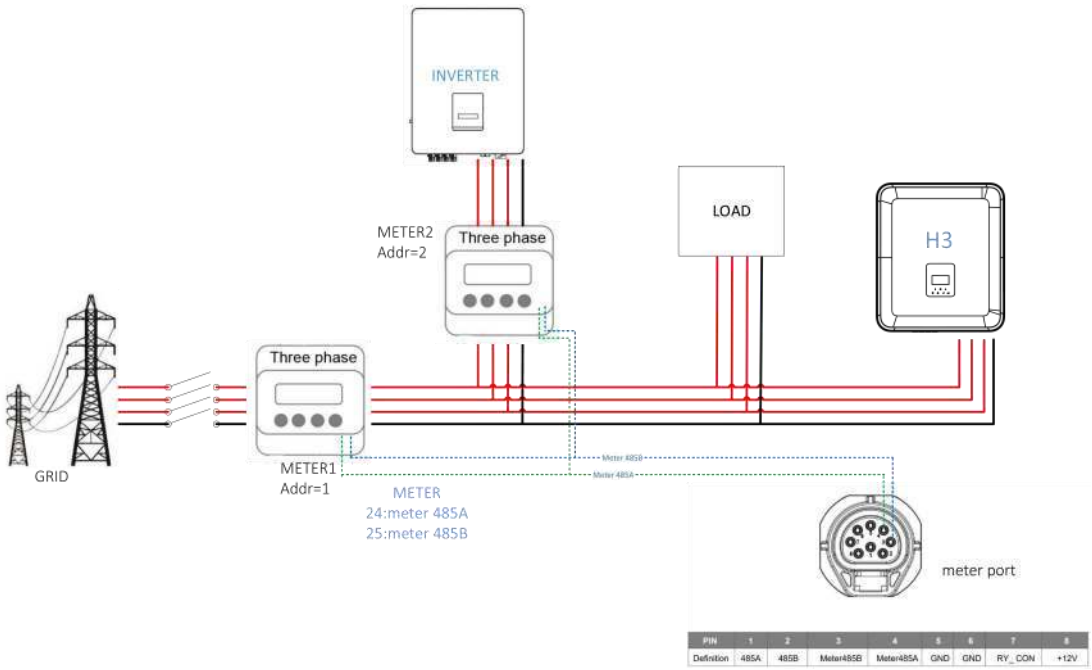

PIN	1	2	3	4	5	6	7	8
Definition	485A	485B	Meter485B	Meter485A	GND	GND	RY_ CON	+12V

- **DRM**

DRM0 setting

Settings → Feature Parm → DRM0 → Enable/Disable

DRM is provided to support several demand response modes by emitting control signals as below.

Mode	Requirement
DRM0	Operate the disconnection device.
DRM1	Do not consume power.
DRM2	Do not consume at more than 50% of rated power.
DRM3	Do not consume at more than 75% of rated power and source reactive power if capable.
DRM4	Increase power consumption (subject to constraints from other active DRMs).
DRM5	Do not generate power.
DRM6	Do not generate at more than 50% of rated power.
DRM7	Do not generate at more than 75% of rated power and sink reactive power if capable.
DRM8	Increase power generation (subject to constraints from other active DRMs).

Note: Currently only supports DRM0 function, other functions are under development.

DRM PIN Definition

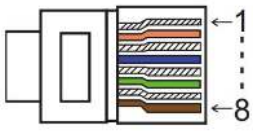

PIN	1	2	3	4	5	6	7	8
Definition	DRM1	DRM2	DRM3	DRM4	+3.3V	DRM0	GND	GND

Model	Socket asserted by shorting pins		Function
DRM0	5	6	Operate the disconnection device.

The DRM function replicates the German ripple control function. The prerequisite for the use of this function is the selection of the German grid connection regulation VDE 4105 and the use of the DRM function.

The ripple control function is described below:

Switching state	Output active power (%Pn)
No contact closed	100%
Several contacts closed	100%
Contact DRM1 to +3.3V	60%
Contact DRM2 to +3.3V	30%
Contact DRM3 to +3.3V	0%
Contact DRM4 to +3.3V	Immediate OFF

- **BMS**

BMS-485: The software used to upgrade the battery in BMS1.0.

BMS-CANL: It is used for communication between the inverter and BMS. If this wire is poor, the communication between the inverter and BMS will not work properly. The stable SOC value displayed on the inverter home page is a good performance of communication. This line is very important for the energy storage system. Please ensure that it is not too long or in a complex environment.

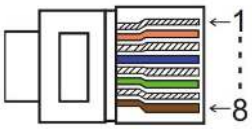

PIN	1	2	3	4	5	6	7	8
Definition	GND	GND	BMS-485B	BMS-CANL	BMS-CANH	BMS-CANH	BMS-CANL	BMS-485A

Connection steps:

Step 1: Open the lid cover.

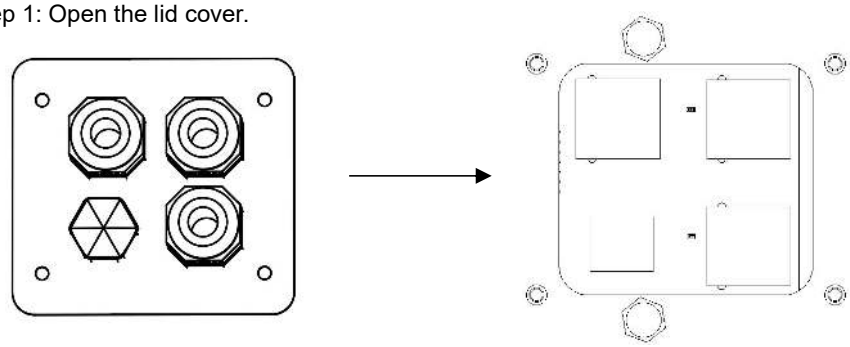

Step 2: Prepare a standard network cable and cable connector, then insert the network cable through the cable connector.

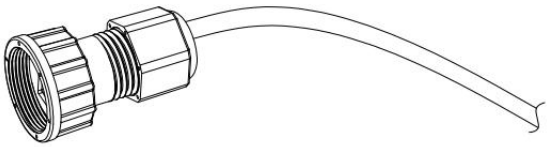

Step 3: Crimp the cable with a Rj45 plug which is inside of the cable connector.

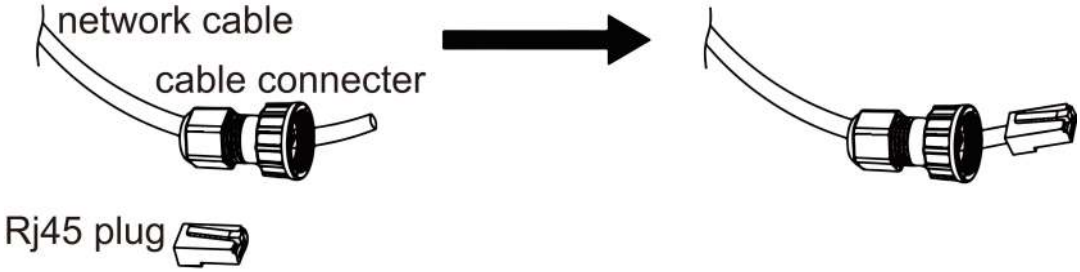

Step 4: Insert the cable connector into COM port at the bottom of inverter and screw it tightly. Then insert other side of the network cable into PC or another device.

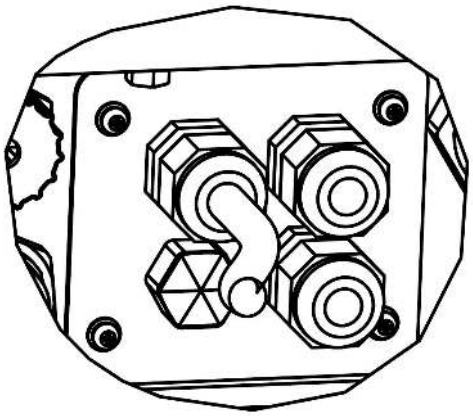

B. On-Grid Parallel Connection

H3/AC3 series Inverter provides the parallel connection function which should make ten inverters maximumly connected in one system when the grid is on. In this system, one inverter will be set as the "Master inverter" which will control every other inverter's energy management and dispatch control. Only one meter needs to be connected in this system and communicate with the "Master inverter", and all other slaver inverter communicate with "Master inverter" by CAN communication-parallel connection. Please note the parallel connection function can only be used when the grid is on.

Parallel 1/2 are the ports used in parallel.

PIN	1	2	3	4	5	6	7	8
Parallel 1	/	/	/	Parallel_CANH	Parallel_CANL	/	BMS-CANH	BMS-CANL
Parallel 2	E_STOP	GND_COM	/	Parallel_CANH	Parallel_CANL	/	/	/

NOTICE

When connecting parallel machines, please connect Parallel 1 to Parallel 2. It is forbidden to connect Parallel 1 to Parallel 1 or Parallel 2 to Parallel 2. This will lead to inaccurate communication of SOC. Because of the machine damage, battery damage and other losses caused by the connection error, will not bear the relevant responsibility.

The system diagram is as follows:

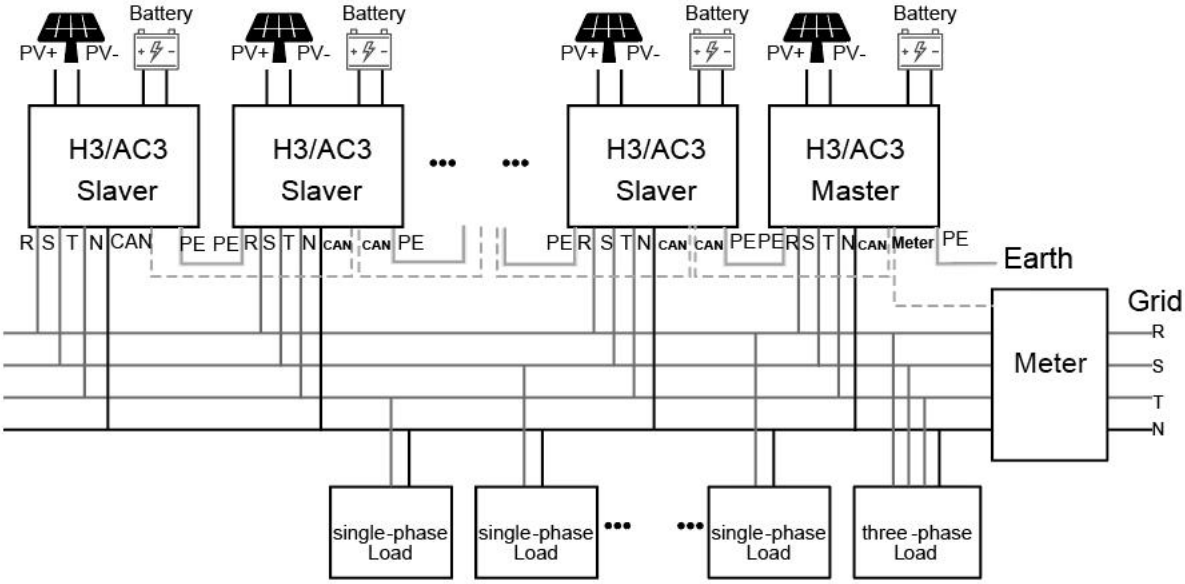

C. Off-Grid Parallel Connection

H3/AC3 series Inverters provide the parallel connection function which should make four inverters maximumly connected in one system when the grid is off. In this system, one inverter will be set as the "Master inverter" which will control every other inverter's energy management and dispatch control. Only one meter needs to be connected in this system and communicate with the "Master inverter", and all other slaver inverter communicate with "Master inverter" by CAN communication-parallel connection. Please note the parallel connection function can only be used when the grid is off.

Parallel 1/2 are the ports used in parallel.

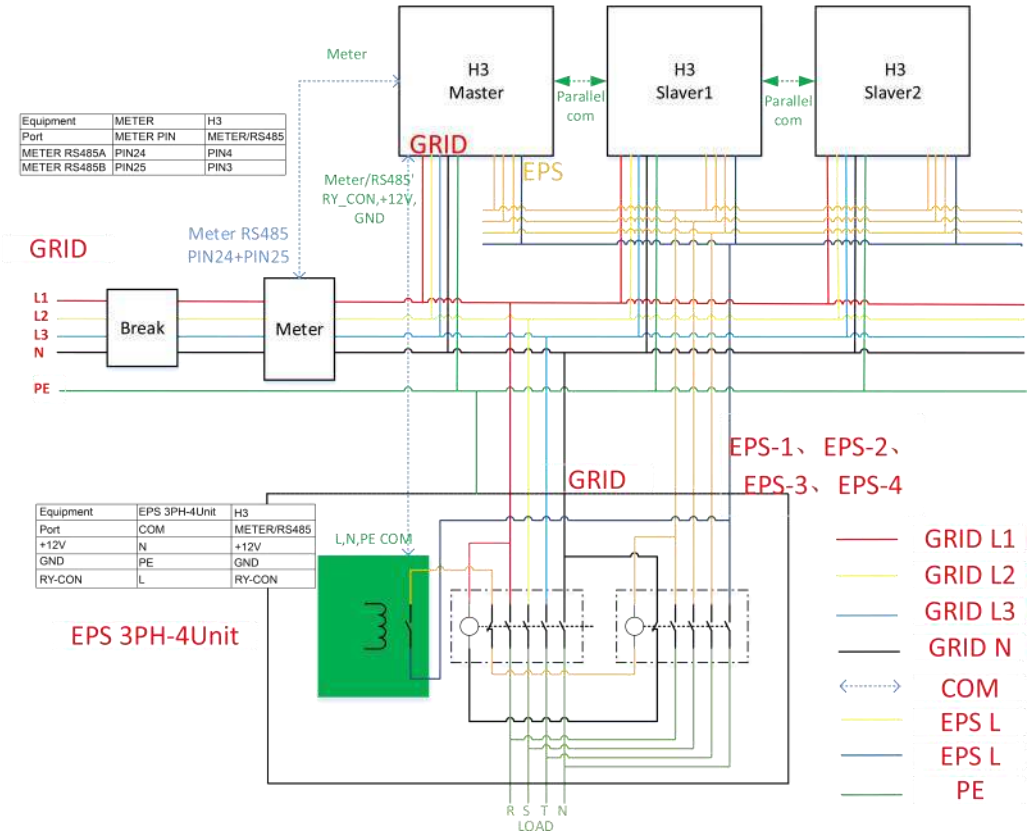

Equipment	METER	H3
Port	METER PIN	METER/RS485
METER RS485A	PIN24	PIN4
METER RS485B	PIN25	PIN3

Equipment	EPS 3PH-4Unit	H3
Port	COM	METER/RS485
+12V	N	+12V
GND	PE	GND
RY-CON	L	RY-CON

⚠ WARNING

Off-network and parallel operation requires the off-network and parallel operation box developed by. This box is called EPS 3PH-4Unit. Does not assume any responsibility for machine damage or safety accidents caused by non-use of the equipment for offline and parallel operation.

NOTICE

The off-grid load of H3 cannot drive the half-wave load. If the half-wave load is carried, the inverter will report an error. The main error is sw bus volt fault. To verify whether the load is a half-wave load, do not add the load when leaving the network, and check whether an error will be reported when leaving the network. If no error is reported, plus the load, if the load size is within the range and an error is reported, the load will not be used on H3.

NOTICE

When using the off-grid parallel box to switch and off the network, the switching time cannot reach within 20ms. The switching time will occur within 10s, which is subject to the switching time of the contactor and the guarantee of switching safety.

The diagram of two H3 offline and parallel machines is attached below:

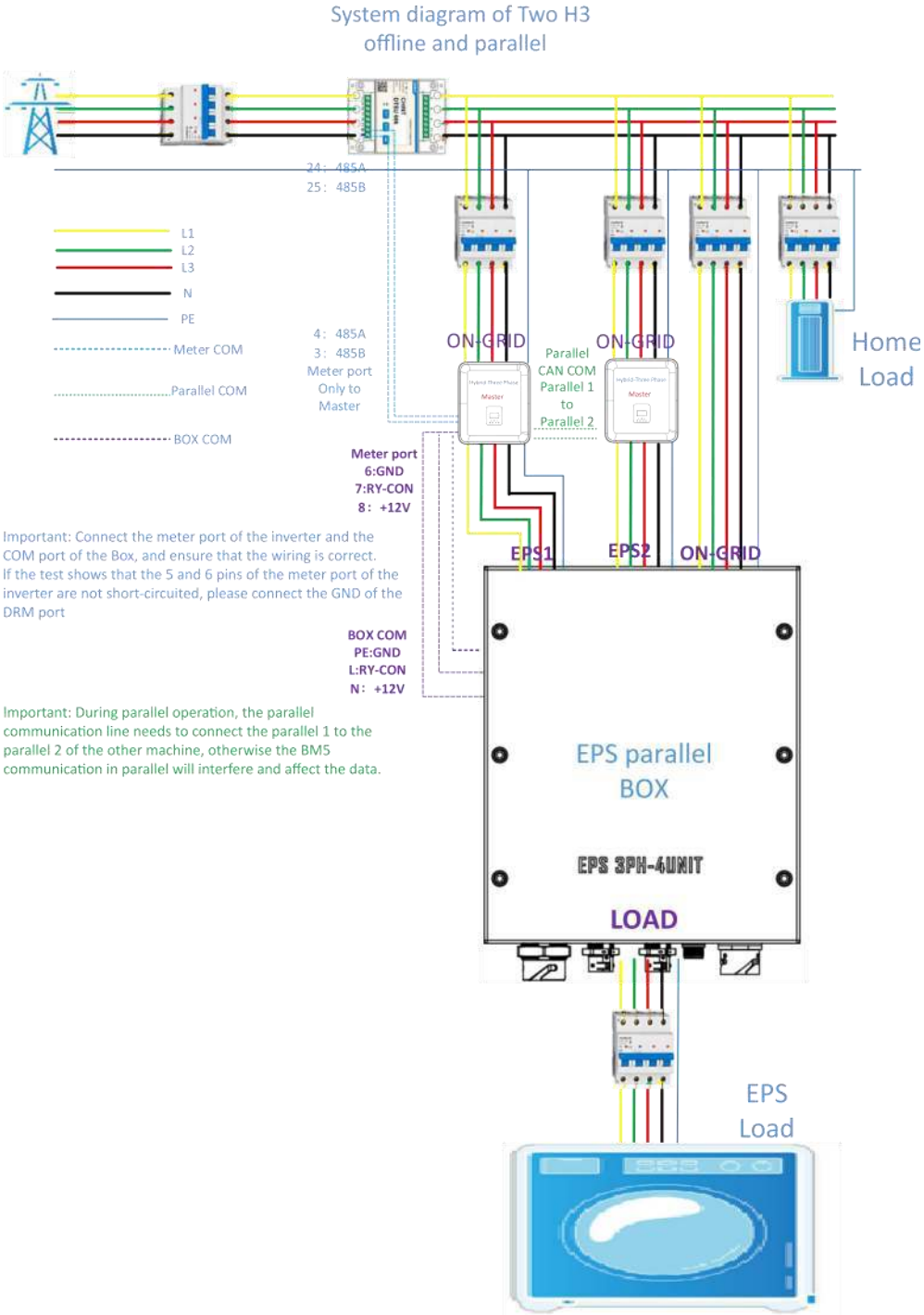

If it is found that the load port of the off-grid parallel box has no voltage during the use process, please use a multimeter to check whether pin 5 and pin 6 of the meter terminal are short-circuited. If pin 5 and pin 6 are not short-circuited, it means that pin 5.6 is not GND, and GND needs to be led from other interfaces to pin 6. It can be measured that the voltage between pin 6 and pin 8 of the meter port is about 10V.

PIN	1	2	3	4	5	6	7	8
Definition	485A	485B	Meter485B	Meter485A	GND	GND	RY_ CON	+12V

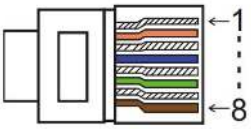

PIN	1	2	3	4	5	6	7	8
Parallel 1	/	/	/	Parallel_CANH	Parallel_CANL	/	BMS-CANH	BMS-CANL
Parallel 2	E_STOP	GND_COM	/	Parallel_CANH	Parallel_CANL	/	/	/

■ Work Modes in parallel system

There are three work modes in parallel system, and your acknowledge of different inverter's work modes will help you understand parallel system better, therefore please read it carefully before operating.

Free mode: Free mode is the mode selected for non-parallel operation. In parallel mode, after one of the machines is set to "Master", the machines that communicate with the host will default to "Slave mode".

Master mode: When one inverter is set as a "Master", this inverter enters master mode. Master mode can be changed to free mode or slaver mode by LCD setting.

Slaver mode: Once one inverter is set as a "Master", all other inverters will enter slaver mode automatically. Slaver mode cannot be changed from other modes by LCD setting.

■ Wiring Operation and LCD Setting

Note: Before operation, please ensure that all the inverters' software version must be the same, otherwise this function cannot be use.

Step1: Connect all inverters' communication together by connecting network cables between CAN ports.

- Use standard CAT 7 network cables for CAN-CAN connection and CAT 5 cable for CAN-Meter connection.
- Insert one side of CAT 7 cable into the first inverter's CAN port and the other side into the next inverter's CAN port.
- Insert one side of CAT 5 cable into the Meter port of meter, and the other side into the CAN 1 port the first inverter or the CAN 2 port of the last inverter.

Note: PV and battery should both be connected to the inverter with meter cable plugged.

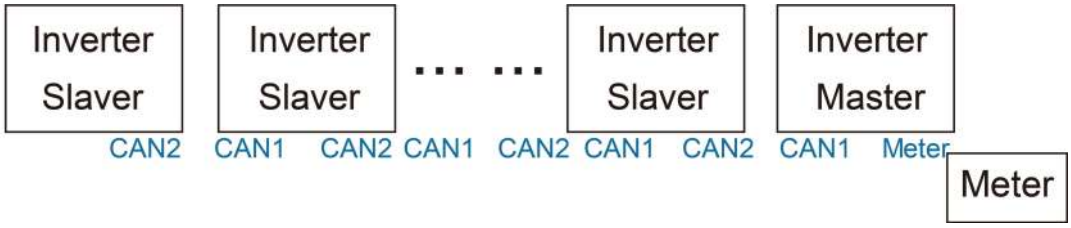

Step2: Set the DIP switch (No need to set all inverter's DIP switch).

- Find the inverter with meter cable plugged.
- Push the white DIP switch to "ON" position (from down to up) by a suitable tweezers.
- DIP switches need to be set on the master and the last slave.

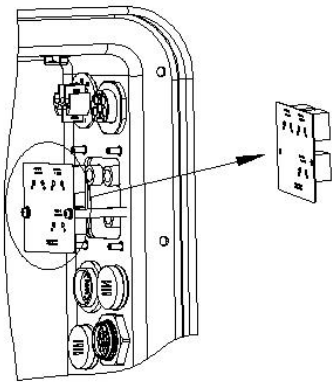

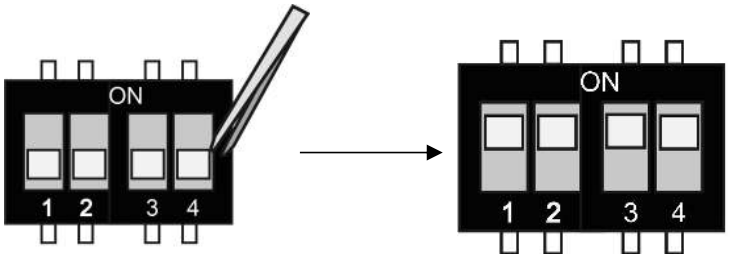

Step3: Find the inverter connected with the meter, then enter setting page of the inverter LCD display, then click parallel, and choose "Master Mode".

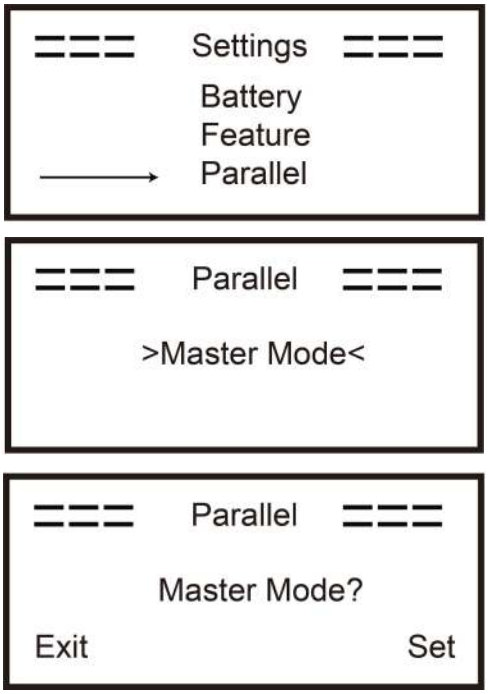

■ How to exit from parallel system

If one inverter wants to exit from this parallel system, please follow the steps below:

Step1: Disconnect all the network cables on the CAN port.

Step2: Enter setting page and click parallel setting, and choose "Free".

Note!

- If a slaver inverter is set to "Free" mode but not disconnect the network cable, this inverter will return to "Slaver "mode automatically.
- If a slaver inverter is disconnected with other inverter but not be set to "Free" mode, this inverter will stop working and maintain "waiting" status.

Introduction to the function of unbalanced load:

If the load of each phase in the household load is different, and the power of each phase output by the inverter is the same, there will be one phase output and one phase input. In order to avoid this situation, the unbalanced load can be turned on. The use method is to enable in the balance load interface.

The following is a simple schematic diagram of this function:

Disable balance load

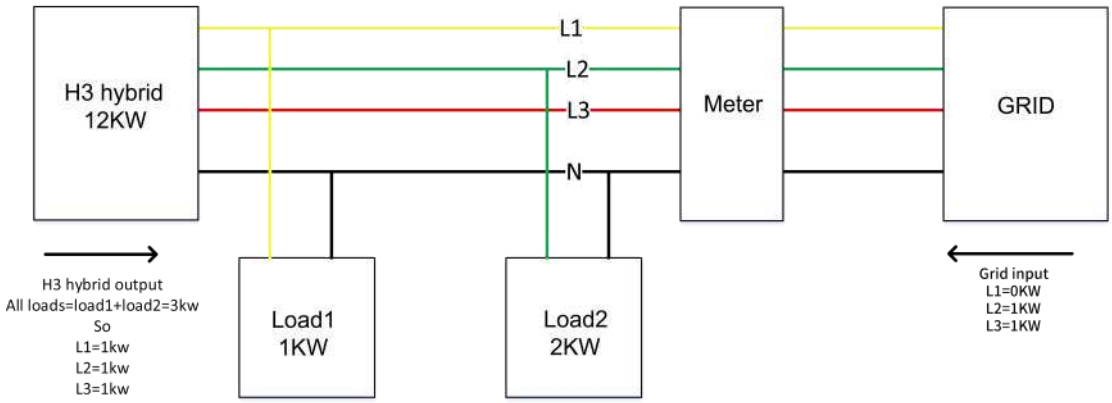

Enable balance load

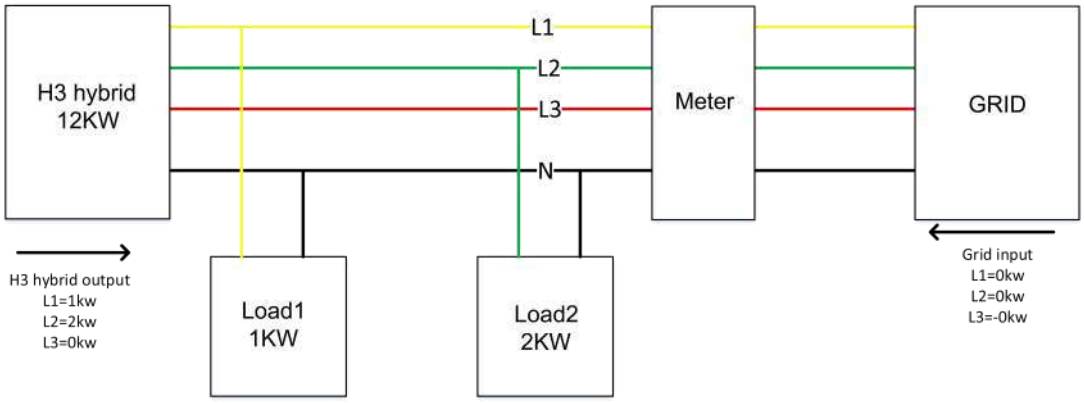

NOTICE
The maximum capacity of balanced load is 1/3 of the rated power, that is, the maximum output capacity of 12kW machine per phase is 4kW. The same is true for unbalanced load of off-grid function. If the single-phase load exceeds 1/3 of the output capacity under off-grid condition, the machine will report an error.

■ LCD display

Main display:

After the start-up the inverter, press “enter”, display will go to the running page, you can check out local data, system data and slave data.

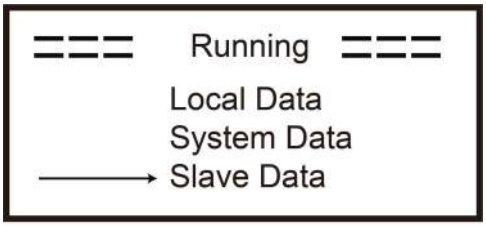

■ Parallel Control Function

Master inverter has an absolute lead in the parallel system to control all slaver inverter's energy management and dispatch control. Once master inverter has some error and stop working, all slaver inverter will be stopped automatically. But master inverter is independent of all slaver inverters to work and will not be affected by slaver inverter's fault.

Overall system will be running according to master inverter’s setting parameters, and most setting parameters of slaver inverter will be kept but not be excuted.

Once slaver inverter exit from system and be running as an independent unit, it’s all setting will be re-excuted.

The rest of this section covers several important parallel control functions, and the next page table shows which LCD options are controlled by master inverter and which can work independently.

Off mode setting:

Off mode can only be set by master inverter (long press ok button on LCD).

Safety setting:

System safety protection is excuted by master inverter's safety. Slaver inverter's protection will only be triggered by master inverter's command.

Self-use setting:

If system is running as self-use mode, please note the Feed in Power Limit set of master inverter is for the overall system and the corresponding set of slaver inverter is invalid.

Force time charge setting:

If system is running as force on time mode, please note all sets on master inverter about force on time are all for the overall system and the corresponding sets of slaver inverter are invalid.

Remote control setting:

The remote demand instructions received by master inverter will be interpreted as the demand instructions to overall system.

6.7 EPS Connection (Non-parallel State)

Common loads description

Under EPS mode, if need to connect the inductive load on EPS port, please ensure that the instantaneous power of the load at startup is lower than the maximum power of the EPS mode. Below table shows some conventional and reasonable loads for you reference. Please refer to your loads' manual for the actual specs.

Type	Power		Common equipment	Example		
	Start	Rated		Equipment	Start	Rated
Resistive load	X 1	X 1	Incandescent lamp, TV	100W Incandescent lamp	100VA (W)	100VA (W)
Capacitive load	X 2	X 1.5	Fluorescent lamp	40W Fluorescent lamp	80VA (W)	60VA (W)
Inductive load	X 3~5	X 2	Fan, Fridge	150W Fridge	450-750VA (W)	300VA (W)

*Unipolar load is not supported.

Half-wave load is not supported.

For some motor loads, the starting current may be far more than 5 times the current, which is also not supported.

6.8 System Connection Diagrams

For countries such as **Australia, New Zealand, South Africa, etc,** please follow local wiring regulations.
According to Australian safety requirements, **the N cables of the GIRD side and EPS side must be connected together**. Otherwise, the EPS function will not work.

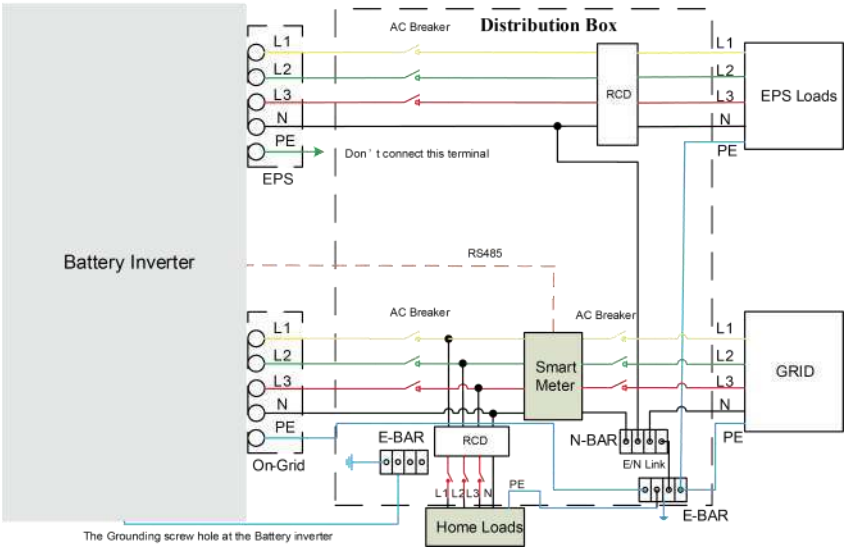

For countries such as **China, Germany, the Czech Republic, Italy, etc,** please follow local wiring regulations.
This diagram is an example for an application in which neutral is separated from the PE in the distribution box.

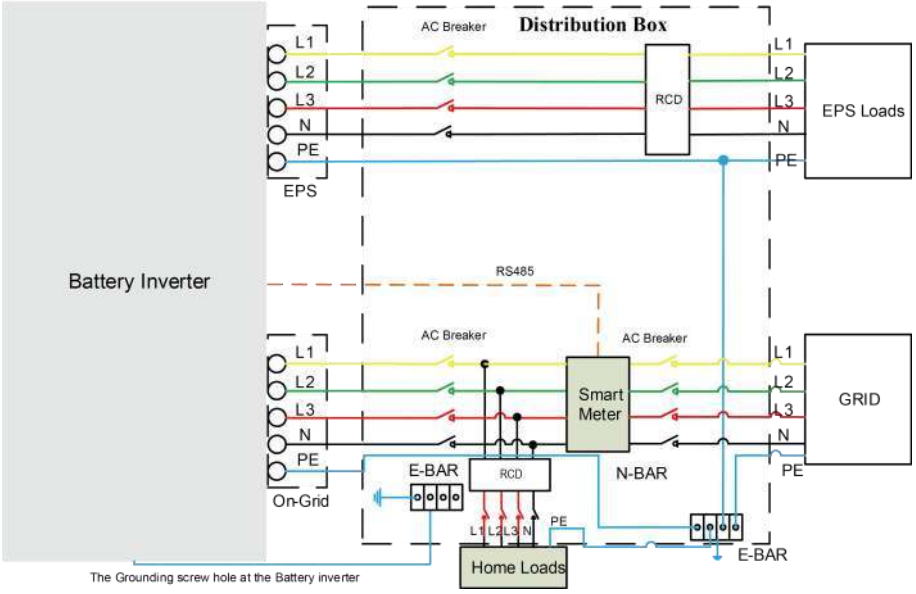

6.9 Inverter Start-Up

Please refer to the following steps to start up the inverter.

1. Ensure the inverter fixed well.
2. Make sure all the DC wirings and AC wirings are completed.
3. Make sure the meter is connected well.
4. Make sure the battery is connected well.
5. Make sure the external EPS contactor is connected well (if needed).
6. Make sure the BMS buttons and battery switches are off.
7. Turn on the PV/DC switch (for H3 only), AC breaker, EPS breaker and battery breaker.
8. Enter the settings page, default password is '0000', select START / STOP and set it to start. (long press "enter" to quickly go to the START / STOP page).

Note:

- When starting the inverter for the first time, the country code will be set by default to the local settings. Please check if the country code is correct.
- Set the time on the inverter using the button or by using the APP.

6.10 Inverter Switch Off

Please refer to the following steps to switch off the inverter.

1. Enter the settings page, select START / STOP and set it to stop.
2. Turn off the PV/DC switch (for H3 only), AC breaker, EPS breaker and battery breaker.
3. Wait 5 min before you open the upper lid (if in need of repair).

7. Firmware Upgrading

User can upgrade inverter's firmware via a U-disk.

- **Safety check**

Please ensure the inverter is steadily powered on.

Inverter must keep the battery on through whole procedure of upgrading. Please prepare a PC and make sure the size of U-disk is under 32G, and the format is fat 16 or fat 32.

⚠CAUTION
Caution! Please DO NOT apply USB3.0 U-disk on inverter USB port, the inverter USB port only support for USB2.0 U-disk.

- **Upgrading steps:**

Step 1: Please contact our service support to get the update files, and extract it into your U-disk as follow:

update/master/ H3_E_Master_Vx.xx.bin

update/slave/ H3_E_Slave_Vx.xx.bin

update/manager/ H3_Manager_Vx_xx_E.bin

Note: Vx.xx is version number.

Warning: Make sure the directory is in accordance with above form strictly! Do not modify the program file name, or it may cause the inverter not work anymore!

Step 2: Unscrew the waterproof lid and insert U-disk into the "USB" port at the bottom of the inverter.

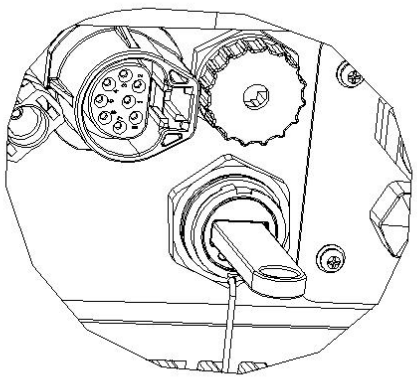

Step 3: The LCD will show the selection menu. Then press up and down to select the one that you want to upgrade and press "OK" to confirm to upgrade.

Step 4: After the upgrade is finished, pull out the U-disk. Screw the waterproof lid.

- **local upgrading:**

USB Upgrade Operation Guide(Apply to H3)

Introduction: The inverter is a high-tech integrated system with a CPU controller, which requires maintenance and upgrade. The upgrade is easy to operate with by end user or installer, upgrade files will be provided by manufacturer, please prepare everything ready before performing this upgrade.

**The same procedure is used for H1/AC1/H3 charger.*

Preparations:

1)Prepare one USB 2.0 with memory less than 32G(USB 3.0 incompatibility)

Edit	USB 2.0	USB 3.0
	★★★☆☆ (385 ratings)	★★★★☆ (457 ratings)
Released	April 2000	November 2008
Speed	High Speed or HS, 480 Mbps (Megabits per second)	10 times faster than USB 2.0. Super Speed or SS, 4.8 Gbps (Giga bits per second)
Signaling Method	Polling mechanism i.e can either send or receive data (Half duplex)	Asynchronous mechanism i.e. can send and receive data simultaneously (Full duplex)

Edit	USB 2.0	USB 3.0
Power Usage	Up to 500 mA	Up to 900 mA. Allows better power efficiency with less power for idle states. Can power more devices from one hub.
Number of wires within the cable	4	9
Standard-A Connectors	Grey in color	Blue in color
Standard-B Connectors	Smaller in size	Extra space for more wires

2) Install the USB disk on your laptop, open it and create a folder named‘update’

3) Create another three separate subfolders named ‘manager’ ‘master’ ‘slave’under ‘update’ folder.

4) Put the upgrade file into corresponding folder as shownbelow

* Formate fo the file name: Model_Firmware type_Vx_xx

File names example:

U:\update\master\H3_Master_Vx_xx

U:\update\slave\H3_Slave_Vx_xx

U:\update\manager\H3_Manager_Vx_xx

5) Prepare a slotted screwdriver for removing the upgrade portcover.

Upgrade procedure:

1.Turn off AC breaker (main circuit breaker) firstly then turn off DC breaker, make sure the inverter is powered off.

2.Remove the upgrade port cover with a screwdriver.

3.Plug in the USB disk

4.Only turn on DC breaker (**make sure PV voltage is above 120V**) wait for 10 seconds, the inverter screen will show as below:

5. If you want to upgrade the inverter firmware, click “up” or “down” to choose the targeted firmware, then click “enter” to start the upgrade. The upgrade will proceedlike .
below:

NOTE: Main CPU is “master”, Slave CPU is “slave”, HMI is “manager”.

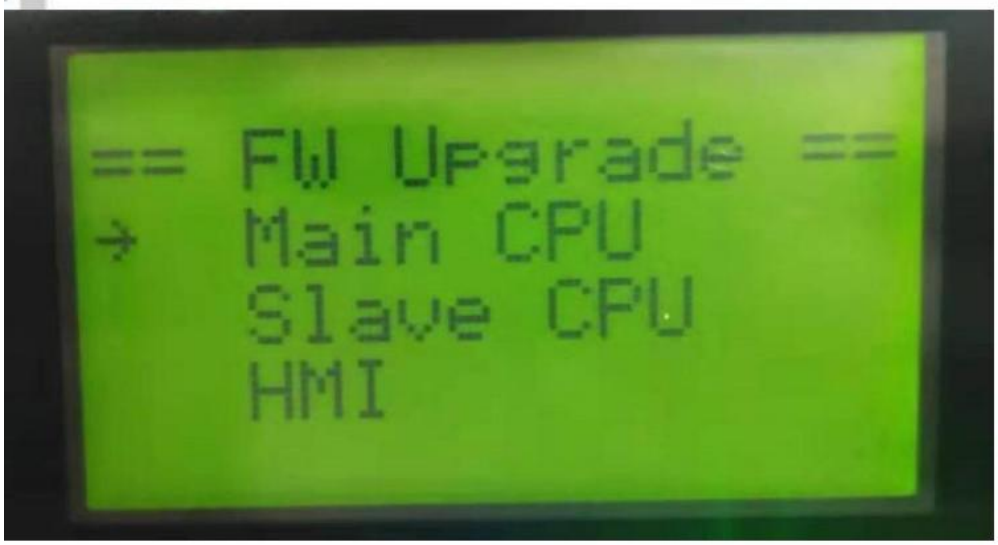

6. Remove the USB disk after upgrade completed. Follow the procedure blew and click the option to view the version:

Menu -> About -> Inv Ver

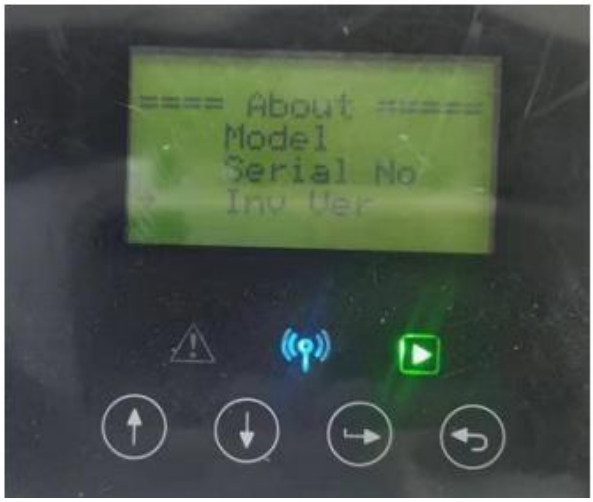

7. Turn on AC &DC breaker. If you updated the HMI, long press the “enter” and click “set” to turn on the inverter. Make sure the inverter can enter **Normal State**.

8. Operation

8.1 Control Panel

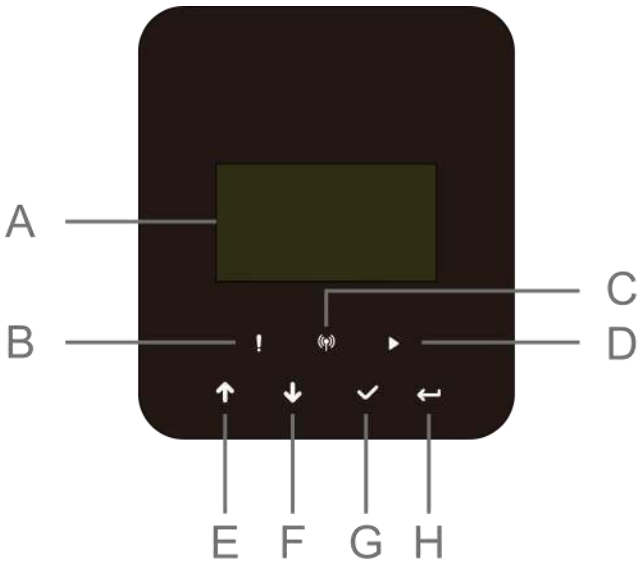

Object	Name	Function
A	LCD screen	Display the information of the inverter.
B	Indicator LED	Red: The inverter is in fault mode.
C		Blue: The inverter is normally connected to the battery.
D		Green: The inverter is in normal state.
E	Function button	Up button: Move cursor to upside or increase value.
F		Down button: Move cursor to downside or decrease value.
G		OK button: Confirm the selection.
H		Return button: Return the previous operation.

1. Press and hold the "√" button on the top of the screen and select "stop" to stop the machine.
2. Disconnect the AC and eps vacs.
3. Rotate DC SWITCH to the off state.
4. Turn off the buttons and control switches on the battery.
5. Wait for the screen on top of the machine to go off.
6. Wait for 5 minutes, this is to ensure that the capacitors inside the machine discharge.
7. Use a current clamp to make sure there is no current on the DC line.
8. Using the tool on the DC terminal, press the two snaps on the DC terminal and pull it outward with force at the same time.
9. Make sure there is no PV positive terminal and no voltage above the PV negative terminal, use a multimeter to measure.
10. Also use a multimeter to measure the PV positive and PV negative terminals to the PE line above the voltage no voltage.
11. Use a tool to disconnect the AC terminal and the terminal for communication.

8.2 Function Tree

- Single machine operation mode

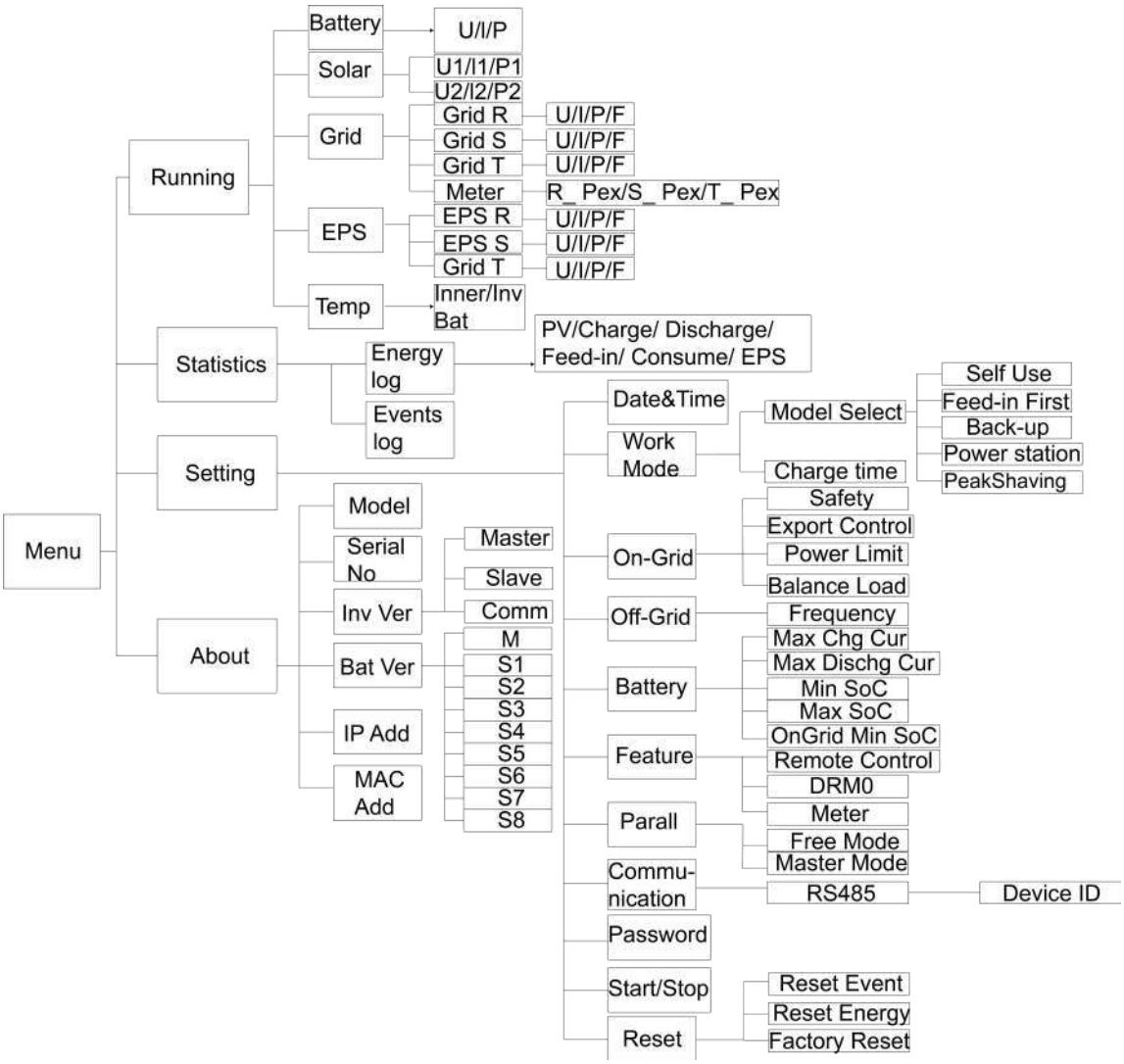

- Machine parallel mode-Master

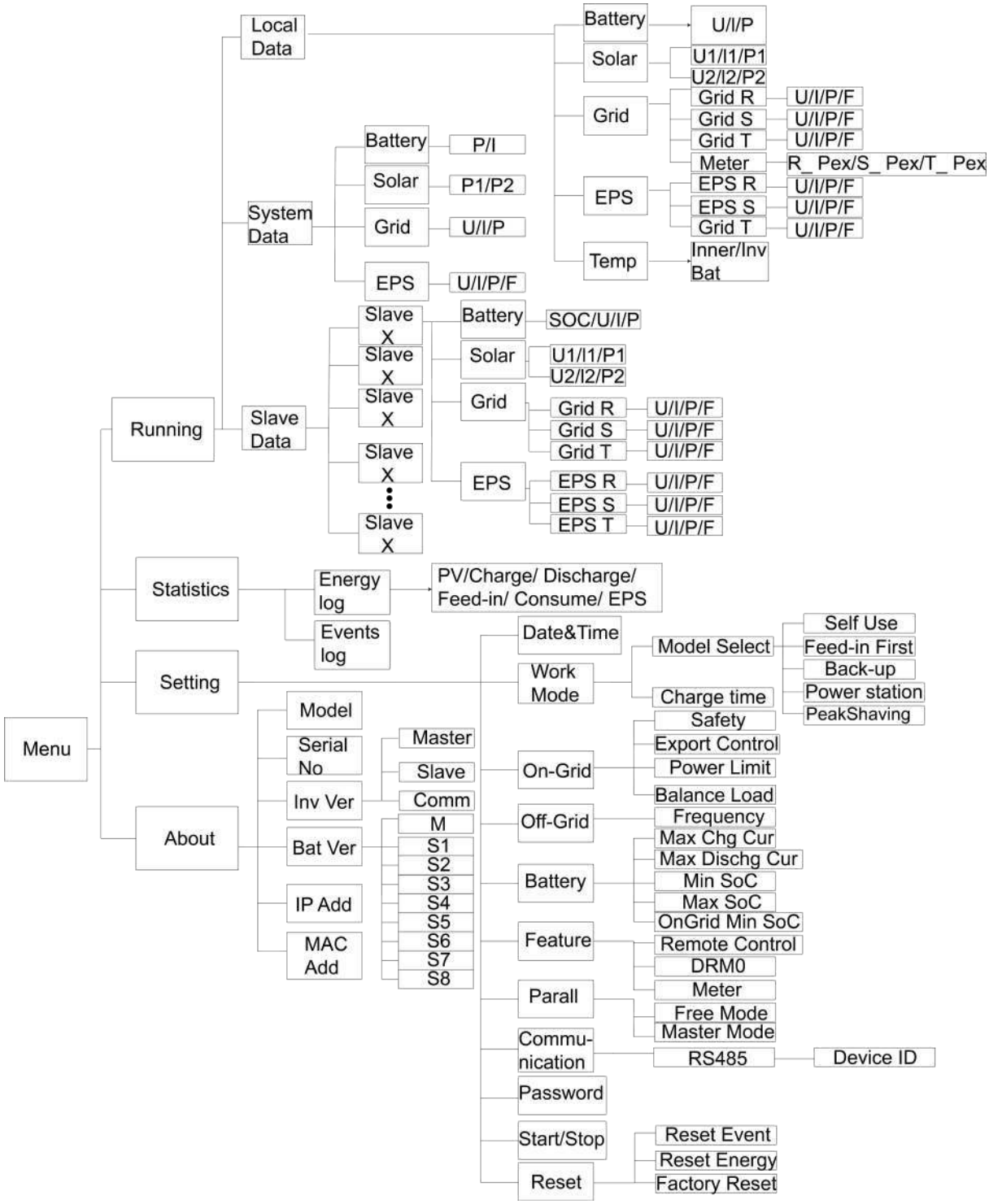

9. Maintenance

This section contains information and procedures for solving possible problems with the inverters and provides you with troubleshooting tips to identify and solve most problems that can occur.

9.1 Alarm List

Fault Code	Solution
Grid Lost Fault	Grid is lost. • System will reconnect if the utility is back to normal. • Or seek help from us, if not go back to normal state.
Grid Volt Fault	Grid voltage out of range. • System will reconnect if the utility is back to normal. • Or seek help from us, if not go back to normal state.
Grid Freq Fault	Grid frequency out of range. • System will reconnect if the utility is back to normal. • Or seek help from us, if not go back to normal state.
PLL_ OverTime	Three-phase system access single-phase AC. • System will reconnect if the utility is back to normal. • Or seek help from us, if not go back to normal state.
10min Volt Fault	The grid voltage is out of range for the last 10 Minutes. • System will reconnect if the utility is back to normal. • Or seek help from us, if not go back to normal state.
SW Inv Cur Fault	Output current high detected by software. To upgrade to the latest software, at least ensure that the master is upgraded to 1.69 or above. • Disconnect PV, grid and battery, then reconnect. • Or seek help from us, if not go back to normal state.
DCI Fault	DC component is out of limit in output current. • Disconnect PV, grid and battery, then reconnect. • Or seek help from us, if not go back to normal state.
HW Inv Cur Fault	Output current high detected by hardware. • Disconnect PV, grid and battery, then reconnect. • Or seek help from us, if not go back to normal state.
SW Bus Vol Fault	Bus voltage out of range detected by software. Please check whether the N line is connected to the GRID port of the inverter. To upgrade to the latest software, at least ensure that the master is upgraded to 1.69 or above. • Disconnect PV, grid and battery, then reconnect. • Or seek help from us, if not go back to normal state.
Bat Volt Fault	Battery voltage fault. • Check if the battery input voltage is within the normal range. • Or seek help from us.

SW Bat Cur Fault	Battery current high detected by software. • Disconnect PV, grid and battery, then reconnect. • Or seek help from us, if not go back to normal state.
Iso Fault	The isolation is failed. • Please check if the insulation of electric wires is damaged. • Wait for a while to check if back to normal. • Or seek for help from us.
Res Cur Fault	The residual current is high. • Please check if the insulation of electric wires is damaged. • Wait for a while to check if back to normal. • Or seek for help from us.
Pv Volt Fault	PV voltage out of range. • Please check the output voltage of PV panels. • Or seek for help from us.
SW Pv Cur Fault	PV input current high detected by software. • Disconnect PV, grid and battery, then reconnect. • Or seek help from us, if not go back to normal state.
Temp Fault	The inverter temperature is high. • Please check if the environment temperature. • Wait for a while to check if back to normal. • Or seek for help from us.
Ground Fault	The ground connection is failed. • Check the voltage of neutral and PE. • Check AC wiring. • Disconnect PV, grid and battery, then reconnect. • Or seek help from us, if not go back to normal state.
Over Load Fault	Over load in on grid mode. • Please check if the load power exceeds the limit. • Or seek for help from us.
Eps Over Load	Over load in off grid mode. • Please check if the eps load power exceeds the limit. • Or seek for help from us.
Bat Power Low	The battery power is low. • Wait the battery to be recharged. • Or seek for help from us.
HW Bus Vol Fault	Bus voltage out of range detected by hardware. • Disconnect PV, grid and battery, then reconnect. • Or seek help from us, if not go back to normal state.
HW Pv Cur Fault	PV input current high detected by hardware. Check whether PV positive and negative are connected. • Disconnect PV, grid and battery, then reconnect. • Or seek help from us, if not go back to normal state.

HW Bat Cur Fault	Battery current high detected by hardware. • Disconnect PV, grid and battery, then reconnect. • Or seek help from us, if not go back to normal state.
SCI Fault	The communication between master and manager is fail. • Disconnect PV, grid and battery, then reconnect. • Or seek help from us, if not go back to normal state.
MDSP SPI Fault	The communication between master and slave is fail. • Disconnect PV, grid and battery, then reconnect. • Or seek help from us, if not go back to normal state.
MDSP Smpl Fault	The master sample detection circuit is failed. • Disconnect PV, grid and battery, then reconnect. • Or seek help from us, if not go back to normal state.
Res Cur HW Fault	Residual current detection device is failed. • Disconnect PV, grid and battery, then reconnect. • Or seek help from us, if not go back to normal state.
Inv EEPROM Fault	The inverter eeprom is fault. • Disconnect PV, grid and battery, then reconnect. • Or seek help from us, if not go back to normal state.
PvCon Dir Fault	The PV connection is reversed. • Check if the positive pole and negative pole of PV are correctly connected. • Or seek help from us.
Bat Relay Open	The battery relay keeps open. • Disconnect PV, grid and battery, then reconnect. • Or seek help from us, if not go back to normal state.
Bat Relay Short Circuit	The battery relay keeps close. • Disconnect PV, grid and battery, then reconnect. • Or seek help from us, if not go back to normal state.
Bat Buck Fault	The battery buck circuit mosfet is fail. • Disconnect PV, grid and battery, then reconnect. • Or seek help from us, if not go back to normal state.
Bat Boost Fault	The battery boost circuit mosfet is fail or The relay on the battery side of the inverter is not closed. To upgrade to the latest software, at least ensure that the master is upgraded to 1.69 or above. • Disconnect PV, grid and battery, then reconnect. • Or seek help from us, if not go back to normal state.
Eps Relay Fault	The eps relay is failed. • Disconnect PV, grid and battery, then reconnect. • Or seek help from us, if not go back to normal state.
BatCon Dir Fault	The battery connection is reversed. • Check if the positive pole and negative pole of battery are correctly connected. • Or seek help from us.

Grid Relay Fault	The grid relay keeps open or close. • Disconnect PV, grid and battery, then reconnect. • Or seek help from us, if not go back to normal state.
RDSP SPI Fault	The communication between master and slave is fail. • Disconnect PV, grid and battery, then reconnect. • Or seek help from us, if not go back to normal state.
RDSP Smpl Fault	The slave sample detection circuit is failed. • Disconnect PV, grid and battery, then reconnect. • Or seek help from us, if not go back to normal state.
ARM EEPROM Fault	The manager eeprom is fault. • Disconnect PV, grid and battery, then reconnect. • Or seek help from us, if not go back to normal state.
Meter Lost Fault	The communication between meter and inverter is interrupted. • Check if the communication cable between meter and inverter is correctly and well connected.
BMS Lost	The communication between BMS and inverter is interrupted. • Check if the communication cable between BMS and inverter is correctly and well connected.
Bms Ext Fault	The communication between BMS and inverter is interrupted. • Check if the communication cable between BMS and inverter is correctly and well connected.
Bms Int Fault	DIP switch at the wrong position; The communication between battery packs is interrupted. • Move the DIP switch to the correct position; • Check if the communication cable between battery packs is correctly and well connected.
Bms Volt High	Battery over voltage. • Please contact battery supplier.
Bms Volt Low	Battery under voltage. • Please contact battery supplier.
Bms ChgCur High	Battery charge over current. • Please contact battery supplier.
Bms DchgCur High	Battery discharge over current. • Please contact battery supplier.
Bms Temp High	Battery over temperature. • Please contact battery supplier.
Bms Temp Low	Battery under temperature. • Please contact battery supplier.

BmsCellImbalance	The capacities of cells are different. • Please contact battery supplier.
Bms HW Protect	Battery hardware under protection. • Please contact battery supplier.
BmsCircuit Fault	Bms hardware circuit fault. • Please contact battery supplier.
Bms Insul Fault	Battery insulation fault. • Please contact battery supplier.
BmsVoltsSen Fault	Battery voltage sensor fault. • Please contact battery supplier.
BmsTempSen Fault	Battery temperature sensor fault. • Please contact battery supplier.
BmsCurSen Fault	Battery current sensor fault. • Please contact battery supplier.
Bms Relay Fault	Battery relay fault. • Please contact battery supplier.
Bms Type Unmatch	The capacity of battery packs is different. • Please contact battery supplier.
Bms Ver Unmatch	The software between slaves are different. • Please contact battery supplier.
Bms Mfg Unmatch	The cell manufacture is different. • Please contact battery supplier.
Bms SwHw Unmatch	The slave software and hardware are not match. • Please contact battery supplier.
Bms M&S Unmatch	The software between Master and Slave are not match. • Please contact battery supplier.
Bms ChgReq NoAck	No action for charging request. • Please contact battery supplier.

9.2 Troubleshooting and Routine Maintenance

- Troubleshooting

a. Please check the fault message on the System Control Panel or the fault code on the inverter information panel. If a message is displayed, record it before doing anything further.

b. Attempt the solution indicated in table above.

c. If your inverter information panel is not displaying a fault light, check the following to make sure that the current state of the installation allows for proper operation of the unit:

(1) Is the inverter located in a clean, dry, adequately ventilated place?

(2) Have the DC input breakers opened?

(3) Are the cables adequately sized?

(4) Are the input and output connections and wiring in good condition?

(5) Are the configurations settings correct for your particular installation?

(6) Are the display panel and the communications cable properly connected and undamaged?

Contact Customer Service for further assistance. Please be prepared to describe details of your system installation and provide the model and serial number of the unit.

- Maintenance checking list

During the process of using the inverter, the responsible person shall examine and maintain the machine regularly. The required actions are as follows.

- Check that if the cooling fins at the rear of the inverters are collecting dust/dirt, and the machine should be cleaned when necessary. This work should be conducted periodically.
- Check that if the indicators of the inverter are in normal state, check if the display of the inverter is normal. These checks should be performed at least every 12 months.
- Check if the input and output wires are damaged or aged. This check should be performed at least every 12 months.
- Get the inverter panels cleaned and their security checked at least every 6 months.

Note: Only qualified individuals may perform the following works.

10. Decommissioning

10.1 Dismantling the Inverter

- Disconnect the inverter from DC (for H3 only) Input and AC output. Wait for 5 minutes for the inverter to fully de-energize.
- Disconnect communication and optional connection wirings. Remove the inverter from the bracket.
- Remove the bracket if necessary.

10.2 Packaging

If possible, please pack the inverter with the original packaging. If it is no longer available, you can also use an equivalent box that meets the following requirements.

- Suitable for loads more than 30 kg.
- Contains a handle.
- Can be fully closed.

10.3 Storage and Transportation

Store the inverter in dry place where ambient temperatures are always between -40°C - + 70°C. Take care of the inverter during the storage and transportation; keep less than 4 cartons in one stack. When the inverter or other related components need to be disposed of, please ensure it is carried out according to local waste handling regulations. Please be sure to deliver any inverter that needs to be disposed from sites that are appropriate for the disposal in accordance with local regulations.

If you have any questions, please contact your local after-sales service or send an email to: service@fox-ess.com

The copyright of this manual belongs to FOXESS CO., LTD. Any corporation or individual should not plagiarize, partially or fully copy (including software, etc.), and no reproduction or distribution of it in any form or by any means is permitted. All rights reserved.

FOXESS CO., LTD.

Add: No.939, Jinhai Third Road, New Airport Industry Area, Longwan District, Wenzhou, Zhejiang, China

Tel: 0510- 68092998

Web: WWW.FOX-ESS.COM

V1.0.4

10-500-10052-04