User Manual

EP Battery

EP3/ EP4/ EP5/ EP10/ EP11

In order to prevent improper operation before use, please carefully read this manual.

Table of Contents

1. Introduction 1
2. Symbols 1
3. Safety 2
    3.1 Handling 2
    3.2 Installation 2
    3.3 Mounting 3
4. Response to Emergency Situations 4
5. Warm Up 5
    5.1 During Full Warm Up 5
    5.2 During PV Warm Up 5
    5.3 Warm Up Time Slot 5
6. Product Information 6
    6.1 EP3 Specifications 6
    6.2 EP4 Specifications 7
    6.3 EP5 Specifications 8
    6.4 EP10 Specifications 8
    6.5 EP11 Specifications 9
7. Product Features 10
    7.1 Battery System Features 10
    7.2 Monitoring Methods 12
8. Installation 13
    8.1 Tools 13
    8.2 EP3/4/5 13
        8.2.1 Items in the package 13
        8.2.2 Clearance 14
        8.2.3 Installation steps 14
    8.3 EP10/11 21
    8.3.1 Items in the package 21
    8.3.2 Clearance 21
    8.3.3 Installation Steps 22
    8.4 System Operation 28
9. Commissioning 29
10. Exclusion 31
11. Troubleshooting and Maintenance 31
    11.1 Maintenance 31
    11.2 Expanded capacity requirement 31
    11.3 Storage with Low SOC 31
    11.4 Low-Temperature Battery Reserve 32
    11.5 Troubleshooting 32

1. Introduction

The document describes the installation, commissioning, maintenance and troubleshooting of the following high voltage battery listed below.

- EP

The battery chemistry of this product is Lithium Iron Phosphate. This manual is designed for qualified personnel only. The tasks described in this document should be performed by authorized and qualified technicians only.
After installation the installer must explain the user manual to the end user.

2. Symbols

	Symbol Explanation CE mark. The inverter complies with the requirements of the applicable CE guidelines.
	Caution, risk of electric shock.
	Do not place nor install near flammable or explosive materials.
	Install the product out of reach of children.
	Read the instruction manual before starting installation and operation.
	Do not dispose of the product with household wastes.
	Prohibit the use of water to extinguish fires.
	Prohibition of private maintenance.
	Prohibit connector reversal.
	Disconnect the equipment before carrying out maintenance or repair.
	Observe precautions for handling electrostatic discharge sensitive devices.

	PE conductor terminal.

3. Safety

Any work on the batteries should be handled by authorized technicians and hence it is understood that the technicians should familiarize themselves with the contents of this manual before any maintenance or installation is carried out on the system.

3.1 Handling

- Do not expose battery to open flame.
- Do not place the product under direct sunlight.
- Do not place the product near flammable materials. It may lead to fire or explosion in case of accident.
- Store in a cool and dry place with ample ventilation.
- Do not store the product near water sources.
- Store the product on a flat surface.
- Store the product out of reach of children and animals.
- Do not damage the unit by dropping, deforming, impacting, cutting or penetrating with a sharp object. It may cause leakage of electrolyte or fire.
- Do not touch any liquid spilled from the product. There is a risk of electric shock or damage to skin.
- Always handle the battery wearing the insulated gloves.
- Do not step on the product or place any foreign objects on it. This can result in damage.
- Do not charge or discharge damaged battery.
- Do not store the battery near water sources.

3.2 Installation

- Do not connect the pack to inverter conductors or Photo-Voltaic conductors. This will damage the battery and may result in explosion.
- After unpacking, please check the product for damages and missing parts.
- Make sure that the inverter and battery is completely turned off before commencing installation.
- Do not interchange the positive and negative terminals of the battery.
- Ensure that there is no short circuit of the terminals or with any external device.
- Do not exceed the battery voltage rating of the inverter.
- Do not connect the battery to any incompatible inverter.
- Do not connect different battery types together.
- Please ensure that all the batteries are grounded properly.
- Do not open the battery to repair or disassemble. Only manufacturer is allowed to carry out any such repairs.
- In case of fire, use only dry powder fire extinguisher. Liquid extinguishers should not be used.
- Do not install the battery near water sources or places where the battery can get wet.
- Install the battery away from children or pets.
- Do not use battery in high static environment where the protection device might be damaged.
- Do not install with other batteries or cells.
- Please ensure the new batteries mounted on-site comply to the warranty scope or have ever been re-charged within 6 months; on top of that, please make sure the SOC of present battery system onsite is 50%±5%.
- There should be minimal dust and dirt at the location.The building should be of solid brick and concrete structure for installation on walls or floors. If other types of walls and floors are used, they must be made of flame-retardant materials and meet the load requirements of battery.
- **Do not install the battery in a forward tilt, backward tilt, lateral tilt, horizontal position, or upside- down position.**

3.3 Mounting

Make sure the installation site meets the following conditions:

- Ensure the installation area is protected from direct sunlight, rain, and snow accumulation, a shelter (e.g., rain canopy) is recommended.
- Keep the installation area away from high-temperature sources, flammable or explosive materials, and other potential explosion hazards such as gas valves, LPG cylinders, heat pumps, firewood stacks, etc.
- The installation area must be completely waterproof, with a hard, level floor, and the wall should not have noticeable inclined angle.
- Maintain low and stable humidity with good ventilation; dust and dirt within the installation area must be minimized.
- Position the installation area away from television antennas or antenna cables to avoid lightning strikes and electromagnetic interference.
- Avoid the presence of flammable debris around the battery, such as cotton, fabric, haystacks, etc., which may be ignited by sparks and then lead the fire source to the battery, thus causing the battery to burn.
- Avoid the presence of hot or flammable objects around the battery, such as hydraulic bottles (natural gas, oxygen, etc.), heat pumps and so on.

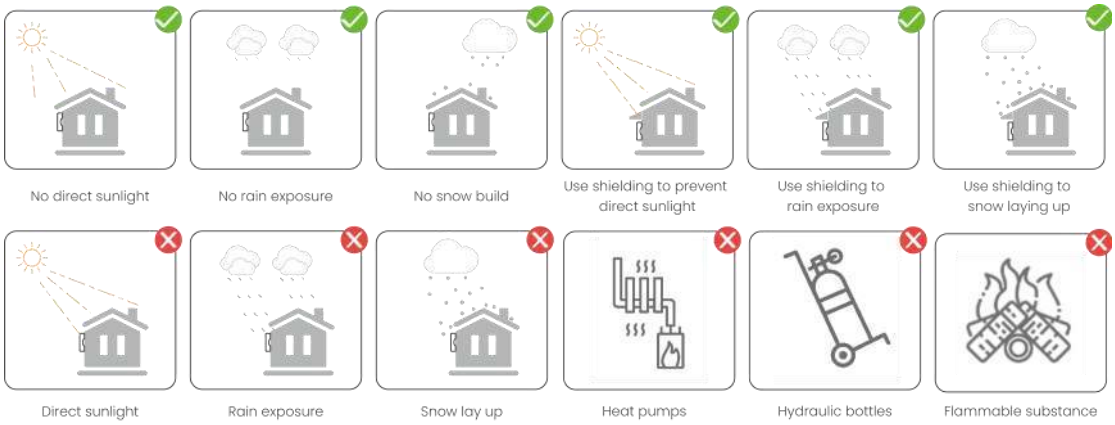

4. Response to Emergency Situations

The battery can be used in single or multi in parallel. It is designed to prevent hazards or failures. However, manufacturer cannot guarantee their absolute safety.
Under exposure to the internal materials of the battery the following recommendations should be carried out by the user.

- If there has been inhalation, please leave the contaminated area immediately and seek medical attention.
- If there has been contact with eyes, rinse the eyes with running water for 15 minutes and seek medical attention immediately.
- If there has been contact with the skin, wash the contacted area with soap thoroughly and seek medical attention immediately.
- If there has been ingestion, induce vomiting and seek medical attention.

Fire Situation
In situations where the battery is on fire, if it is safe to do so, disconnect the battery pack by turning off the switch to shut off the power to the system (External, if any). Use FM-200 or CO_2 fire extinguisher for the battery and an ABC fire extinguisher for the other parts of the system.
Under any fire situation, please evacuate the people from the building immediately before trying to extinguish it.

Note:
Fox ESS batteries incorporate a thermal aerosol fire extinguishing device. This device deploys upon detection of thermal runaway and was capable of suppressing and restricting the spread of fire.

Water Situation
The battery modules are not water resistant. Hence care should be taken not to get it wet. If you find the battery completely or partially submerged in water, do not try to open it. Contact authorized personnel or manufacturer for further instructions.

5. Warm Up

In low-temperature climates at high altitudes or latitudes, particularly during winter, the charging and discharging performance of batteries can significantly decline due to cold temperatures. To address this, Fox ESS has introduced a "Battery Warming Up" feature, enabling the battery system to operate effectively at extremely low temperatures. This feature is exclusively available in the heated versions.

5.1 During Full Warm Up

When the battery temperature is between -25°C and 0°C, the system will warm up the battery to 10°C. Warming up will stop once this temperature is reached, but if the battery temperature falls below 1°C again, the warming up system will reactivate.

The warming up system prioritizes energy from the photovoltaic (PV) system. If PV power is insufficient, it will draw energy from either the battery or the grid, depending on the state of charge (SOC) of the battery.

- If the battery SOC > 40%, energy will be drawn from the battery, following the priority order.
PV > Battery > Grid.
- If the battery SOC < 40%, energy will be sourced from the grid, with the following priority order.
PV > Grid > Battery.

5.2 During PV Warm Up

If there is no energy left in the PV system, the battery warming up can be set on the inverter LCD.

5.3 Warm Up Time Slot

Main page→Setting→Battery→Battery warm up→Control (Enable or Disable)
- Time 1: Start Time 0:00, End Time 0:00
- Time 2: Start Time 0:00, End Time 0:00
- Time 3: Start Time 0:00, End Time 0:00

Important Notes
1. The battery can only discharge when the battery temperature is above -10°C. It can only charge when the battery temperature is above 0°C.
2. Please ensure that the wiring is properly connected and that all batteries are the warm versions; otherwise, the warming up function will not operate.
3. Warming up control is based on the internal cell temperature of the battery, rather than the ambient temperature. Typically, the cell temperature will be higher than the ambient temperature under normal operating conditions.
For further assistance, please contact an authorized personnel or Fox ESS for further instructions.

Note: The three time segments may overlap but cannot be mutually exclusive. Any time outside these segments will utilize PV energy only for warming up.

6. Product Information

EP photovoltaic energy storage system is a high-voltage energy storage system based on lithium-ion ferrous phosphate battery. It is equipped with a customized battery management system (BMS), which is designed for energy storage applications of household photovoltaic power generation users. In the daytime, the surplus power of photovoltaic power generation can be stored in the battery. At night or when necessary, the stored energy can be provided to the electrical equipment, it can improve the use efficiency of photovoltaic power generation, peak-load shifting, and provide emergency standby power.

6.1 EP3 Specifications

Specifications for Battery	
Battery module	EP3
Nominal capacity (Ah)	27
Nominal voltage (Vdc)	192
Usable energy*1 (kWh)	3.3
Battery voltage range (Vdc)	174~219
Max. continuous discharging/charge current (A)	27/27
Short circuit current (kA)	2.3
Recommended charging current (CC-CV) (A)	13.5
Charging cut off current (constant current and constant voltage) (A)	2
Peak charging current (5s) (A)	32.4
Peak discharging current (30s) (A)	65
Cycle life (cycles)	≥4000 @25°C@90%DOD
Storage temperature (°C)	0~35
Operating temperature range*2 (°C)	Charge: 0~55 Discharge: -10~55
Operating temperature range*3 (°C)	Charge: -25~55 Discharge: -25~55
Discharge capacity (Ah)	19@1C@-20±2°C 27@1C@25±2°C
Energy density (Wh / kg)	≥100
Ingress protection	IP65
Communication	CAN
Altitude (m)	⩽2000
Weight (kg)	50.5±2
Dimensions (L×W×H) (mm)	380×147×625
Protective class	Class Ⅰ
Standard	IEC 62477-1;IEC 62619
Warming up function	Optional
*1 This value represents the available energy of the battery system. The actual usable battery energy after combining with inverter to form a system is based on the actual usage conditions. *2 warm up function off *3 warm up function on	

6.2 EP4 Specifications

Specifications for Battery	
Battery module	EP4
Nominal capacity (Ah)	27
Nominal voltage (Vdc)	192
Usable energy*1 (kWh)	4.3
Battery voltage range (Vdc)	174~219
Max. continuous discharging/charge current (A)	27/27
Short circuit current (kA)	2.3
Recommended charging current (CC-CV) (A)	13.5
Charging cut off current (constant current and constant voltage) (A)	2
Peak charging current (5s) (A)	32.4
Peak discharging current (30s) (A)	65
Cycle life (cycles)	≥4000 @25°C@90%DOD
Storage temperature (°C)	0~35
Operating temperature range*2 (°C)	Charge: 0~55 Discharge: -10~55
Operating temperature range*3 (°C)	Charge: -25~55 Discharge: -25~55
Discharge capacity (Ah)	19@1C@-20±2°C 27@1C@25±2°C
Energy density (Wh / kg)	≥100
Ingress protection	IP65
Communication	CAN
Altitude (m)	≤2000
Weight (kg)	50.5±2
Dimensions (L×W×H) (mm)	380×147×625
Protective class	Class Ⅰ
Standard	IEC 62477-1;IEC 62619
Warming up function	Optional

*1 This value represents the available energy of the battery system. The actual usable battery energy after combining with inverter to form a system is based on the actual usage conditions.
*2 warm up function off *3 warm up function on

6.3 EP5 Specifications

Specifications for Battery	
Battery module	EP5
Nominal capacity (Ah)	27
Nominal voltage (Vdc)	192
Nominal energy (kWh)	5.18
Battery voltage range (Vdc)	174~219
Max. continuous discharging/charge current (A)	27/27
Short circuit current (kA)	2.3
Recommended charging current (CC-CV) (A)	13.5
Charging cut off current (constant current and constant voltage) (A)	2
Peak charging current (5s) (A)	32.4
Peak discharging current (30s) (A)	65
Cycle life (cycles)	≥4000 @25°C @90%DOD
Storage temperature (°C)	0~35
Operating temperature range*1 (°C)	Charge: 0~55 Discharge: -10~55
Operating temperature range*2 (°C)	Charge: -25~55 Discharge: -25~55
Discharge capacity (Ah)	19@1C@-20±2°C 27@1C@25±2°C
Energy density (Wh / kg)	≥100
Ingress protection	IP65
Communication	CAN
Altitude (m)	⩽2000
Weight (kg)	50.5±2
Dimensions (L×W×H) (mm)	380×147×625
Protective class	Class Ⅰ
Standard	IEC 62477-1;IEC 62619
Warming up function	Optional
*1 warm up function off *2 warm up function on	

6.4 EP10 Specifications

Specifications for Battery	
Battery module	EP10
Nominal capacity (Ah)	27
Nominal voltage (Vdc)	384
Usable energy*1 (kWh)	9.9
Battery voltage range (Vdc)	348~438
Max. continuous discharging/charge current (A)	27/27
Short circuit current (kA)	3.0
Recommended charging current (CC-CV) (A)	13.5
Charging cut off current (constant current and constant voltage) (A)	2
Peak charging current (5s) (A)	32.4
Peak discharging current (30s) (A)	65
Cycle life (cycles)	≥4000 @25°C @90%DOD
Storage temperature (°C)	0~35
Operating temperature range*2 (°C)	Charge: 0~55 Discharge: -10~55
Operating temperature range*3 (°C)	Charge: -25~55 Discharge: -25~55
Discharge capacity (Ah)	19@1C@-20±2°C 27@1C@25±2°C
Energy density (Wh / kg)	≥102
Ingress protection	IP65
Communication	CAN
Altitude (m)	⩽2000
Weight (kg)	99±2
Dimensions (L×W×H) (mm)	710×147×625
Protective class	Class Ⅰ
Standard	IEC 62477-1;IEC 62619
Warming up function	Optional

*1 This value represents the available energy of the battery system. The actual usable battery energy after combining with inverter to form a system is based on the actual usage conditions.
*2 warm up function off *3 warm up function on

6.5 EP11 Specifications

Specifications for Battery	
Battery module	EP11
Nominal capacity (Ah)	27
Nominal voltage (Vdc)	384
Nominal energy (kWh)	10.36
Battery voltage range (Vdc)	348~438
Max. continuous discharging/charge current (A)	27/27
Short circuit current (kA)	3.0
Recommended charging current (CC-CV) (A)	13.5
Charging cut off current (constant current and constant voltage) (A)	2
Peak charging current (5s) (A)	32.4
Peak discharging current (30s) (A)	65
Cycle life (cycles)	≥4000 @25°C @90%DOD
Storage temperature (°C)	0~35
Operating temperature range*¹ (°C)	Charge: 0~55 Discharge: -10~55
Operating temperature range*² (°C)	Charge: -25~55 Discharge: -25~55
Discharge capacity (Ah)	19@1C@-20±2°C 27@1C@25±2°C
Energy density (Wh / kg)	≥102
Ingress protection	IP65
Communication	CAN
Altitude (m)	⩽2000
Weight (kg)	99±2
Dimensions (L×W×H) (mm)	710×147×625
Protective class	Class Ⅰ
Standard	IEC 62477-1;IEC 62619
Warming up function	Optional
*¹ warm up function off *² warm up function on	

7. Product Features

7.1 Battery System Features

The batteries have been fitted with multiple protection systems to ensure the safe operation of the system. Some of the protection system includes:

- Inverter interface protection: over voltage, over current, external short circuit, reverse polarity, ground fault, over temp, in rush current.
- Battery protection: internal short circuit, over voltage, over current, over temp, under voltage.

The battery system contains the following Interface to allow it to connect and operate efficiently.

Battery interface (EP3/4/5):

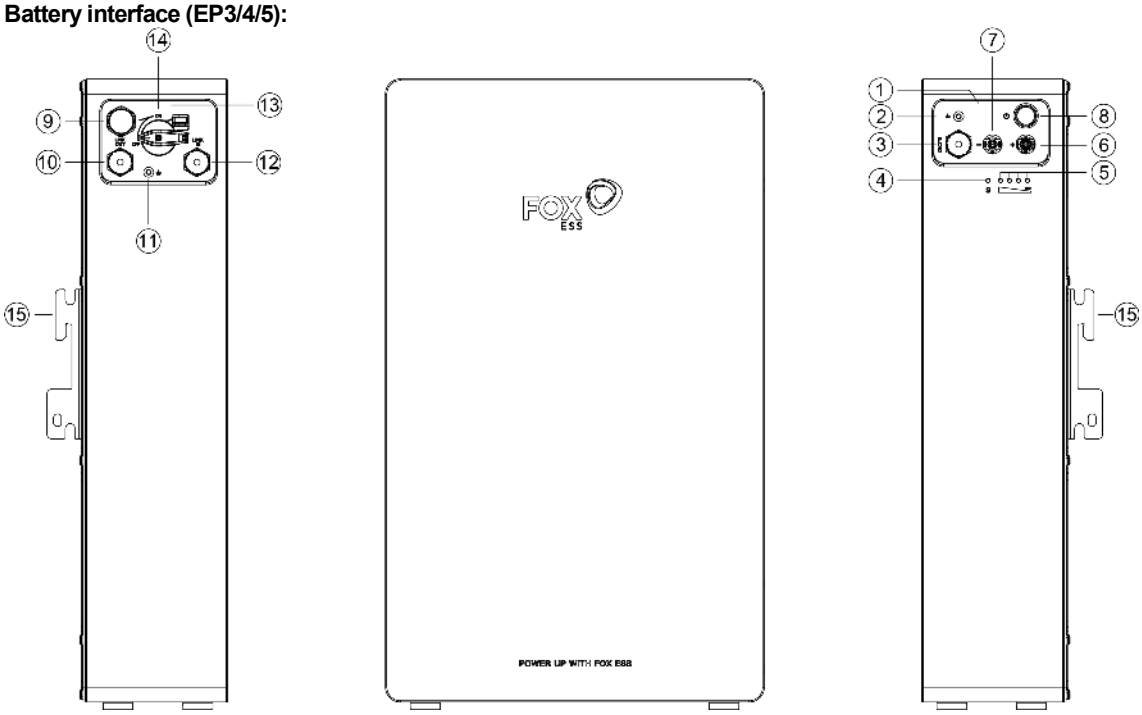

Left side **Front side** **Right side**

Battery interface (EP10/11):

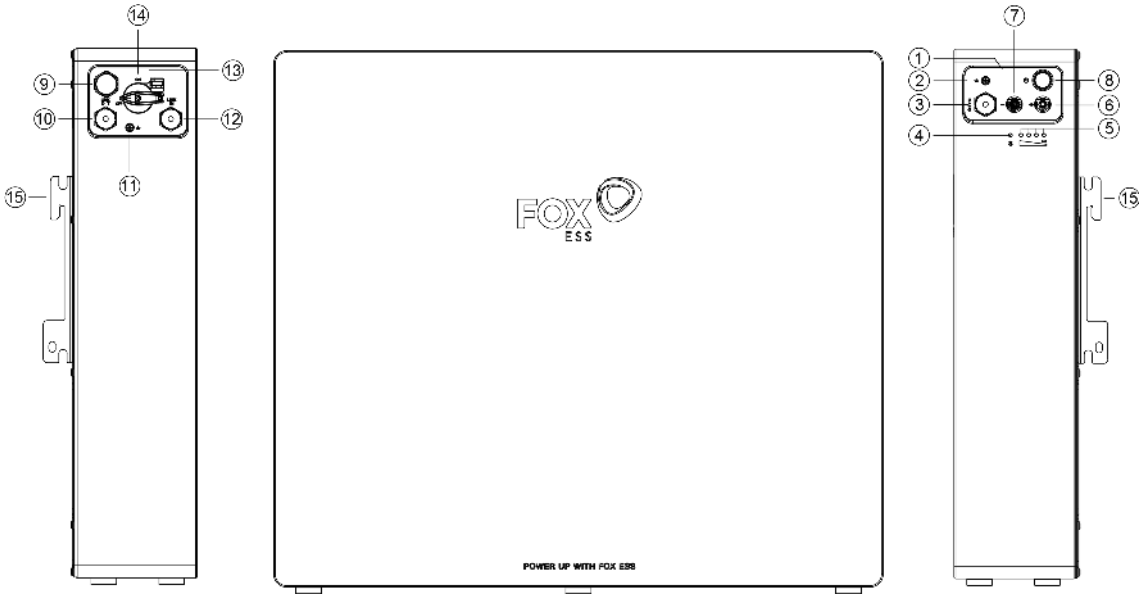

Left side **Front side** **Right side**

Object	Description	Object	Description	Object	Description
A	Handle	F	DC+	K	Ground Terminal
B	Ground Terminal	G	DC-	L	LINK IN
C	PCS COM	H	Power Switch	M	Handle
D	BMS Status LED	I	Valves	N	DC Switch
E	SOC LED	J	LINK OUT	O	Battery Bracket

Communication parallel interface (LINK IN, LINK OUT) and communication interface to inverter (CAN)
Network interface description: LINK IN is connected to the upper battery module, LINK OUT is connected to the lower battery module. PCS is the communication interface to the inverter.
The interface is defined as follows:

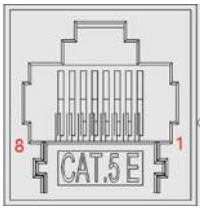

Pin configuration is as follows:

- **LINK IN**

Pin	Function definitions	Function declaration
1	Main_SL	Main_SL
2	RACK_CANL	CANL
3	N/A	N/A
4	N/A	N/A
5	RACK_CANH	CANH
6	ISO_GND	GND
7	Sync_WKEOUT	WakeupIn
8	Encode_IN	Encode_IN

- **LINK OUT**

Pin	Function definitions	Function declaration
1	Last_SL	Last_SL
2	RACK_CANL	CANL
3	N/A	N/A
4	N/A	N/A
5	RACK_CANH	CANH
6	ISO_GND	GND
7	Sync_WKEOUT	WakeupOut
8	Encode_OUT	Encode_OUT

- **PCS**

Pin	Function definitions	Function declaration
1	PCS_Wake+	Wakeup+
2	PCS_Wake-	Wakeup-
3	N/A	N/A
4	PCS_CANL	CANL
5	PCS_CANH	CANH
6	PCS_CANH	CANH
7	PCS_CANL	CANL
8	N/A	N/A

Ground Terminal
This terminal is used to connect the battery to the earth for safety purposes.
In parallel mode, this terminal can also be used to connect to parallel battery.
Handle
The handle is used to carry or move the battery.
DC Switch
Power switch, battery charge and discharge circuit switch.
DC+
Connect bat + of inverter.
DC -
Connect bat - of inverter.
POWER Switch
System power on switch, press and hold switch for 3 seconds, and then release the switch, the system starts to work. It also has a Black Start function, when the system works repeat the previous step: press the “Power Switch”button three times in succession within 4 seconds to enter the Black Start mode. Please complete it within 30 seconds.

BMS Status LED and SOC LED
LED display specific alarm information and battery system power.

7.2 Monitoring Methods
Battery system remote monitoring available via inverter app.

8. Installation

8.1 Tools

The following tools will be required to install the battery.

6mm Magnetic Phillips Screwdriver(A1)

Crimpers(B1)

Safety Shoes(C1)

Safety Gloves(D1)

Safety Glasses(E1)

Rubber Mallet(F1)

Marker(G1)

8mm External Hexagonal Socket(H1)

Cable Ties(I1)

Hammer Drill @ϕ8mm(J1)

Spirit Level(K1)

Multimeter (Vdc>500)(L1)

8.2 EP3/4/5

8.2.1 Items in the package

Please check if following items are including with the package:

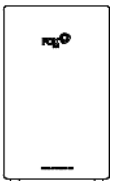

Battery×1(A2)

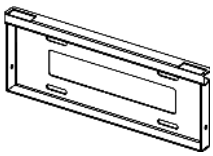

Bracket(wall)×1(B2)

Bracket(battery)×2(C2)

M6×12 Screw×4(D2)

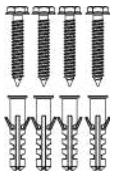

D8 Plastic Expansion Tube×4(E2)

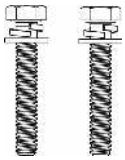

M5×30 Screws×2(F2)

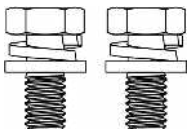

M5×10 Screws×1(G2)

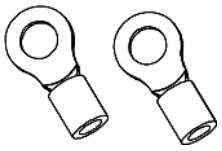

OT Terminal×2(H2)

Parallel Plug×2(I2)

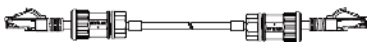

PCS Communication Cable (3m)×1(J2)

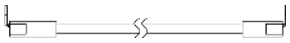

Ground Cable (3m)×1(K2)

Power Cable (3m)×1(L2)

Power Connector Puller×1(M2)

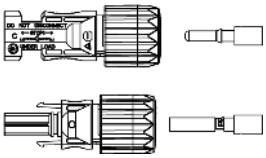

Terminal PV×2(N2)

Quick Installation Guide×1(N2)

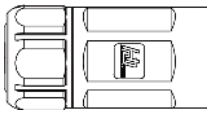

PCS RJ45 Waterproof Connector(P2)

8.2.2 Clearance

Standing mounting:

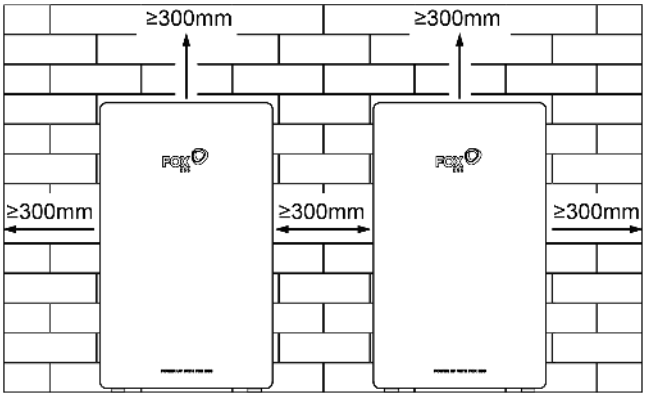

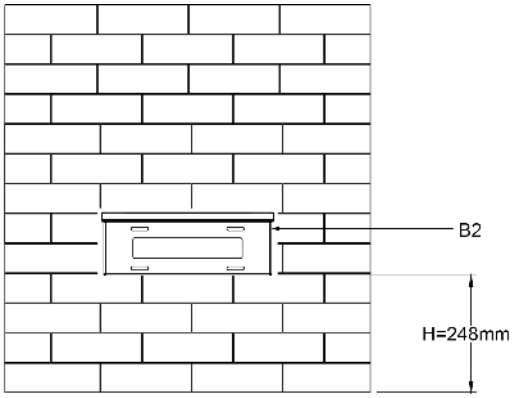

Wall mounting:

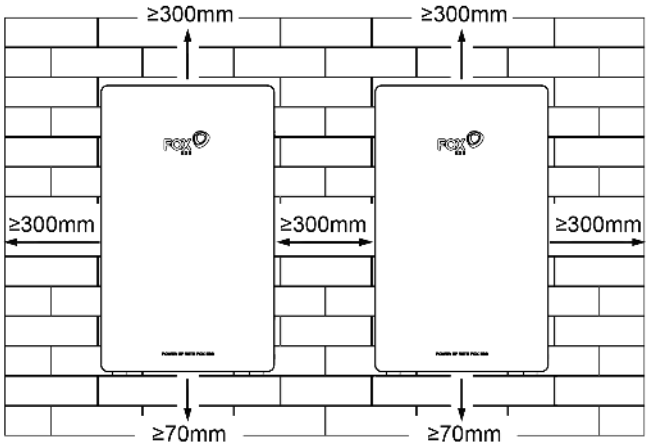

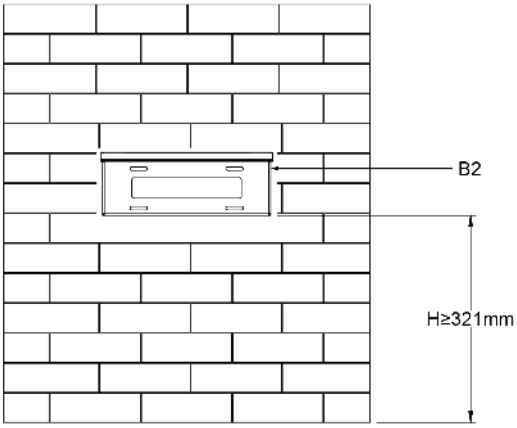

Make sure to leave a space of at least 300 mm. A clearance of at least 300 mm must be left around the battery pack for proper cooling.

8.2.3 Installation steps

Step 1: The steps for installing the bracket are as follows:
a. Place the bracket against the wall, adjust the hole position with a Spirit Level (K1) , and mark the positions of the 4 holes.

b. Remove the bracket, drill the holes with a hammer drill (φ8mm, depth range 45-50mm), and tighten the expansion bolts to ensure that the bracket is securely installed.
c. Fix the bracket to the wall with ST6×40 screws (E2) , ensuring that the bracket is installed in a horizontal position.

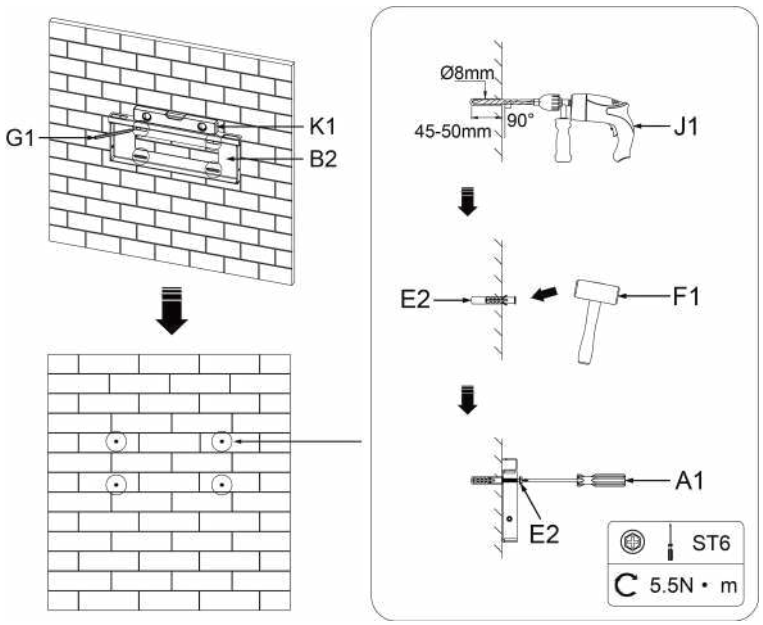

Step 2: The steps for installing the battery on the wall are as follows:
a. Align the buckle of the battery bracket with the holes of mounting bracket on the wall, then place the battery from top to bottom.
b. Observe the left and right sides of the bracket to ensure that the holes of the battery bracket and mounting bracket on the wall are aligned.

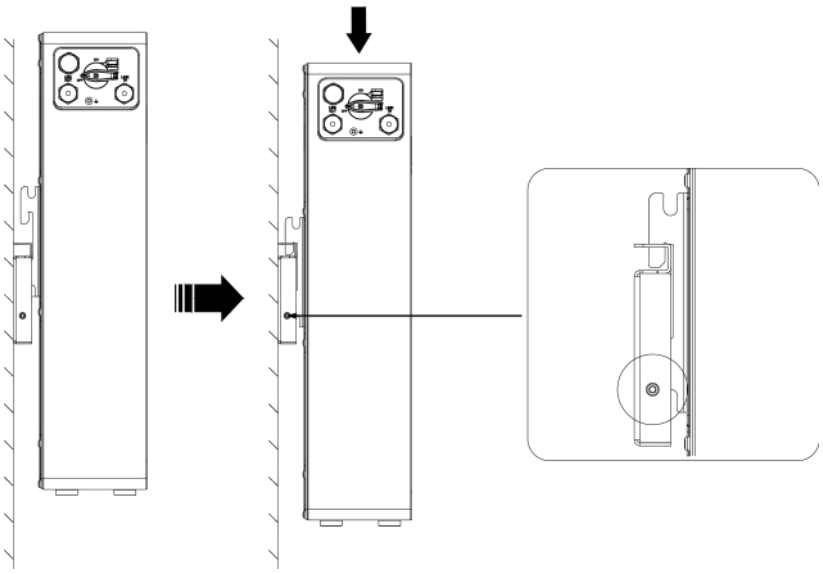

Step 3: Insert 2 pcs of M5×30 screws (F2) into the holes on the left and right sides of the mounting bracket then tighten the screws.

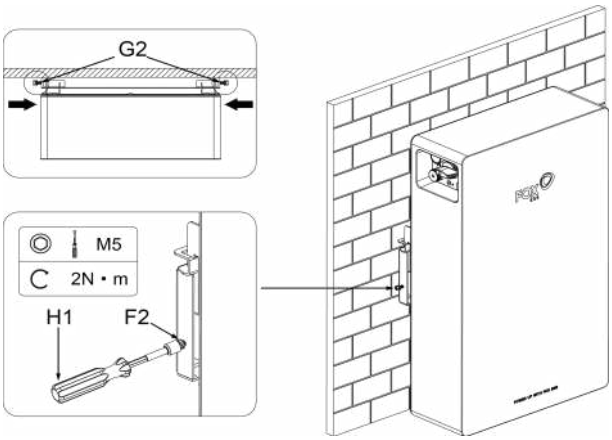

Stand-alone Mode：

Step 1: Insert the 2 Parallel Plugs (I2) into the LINK IN and LINK OUT ports respectively.

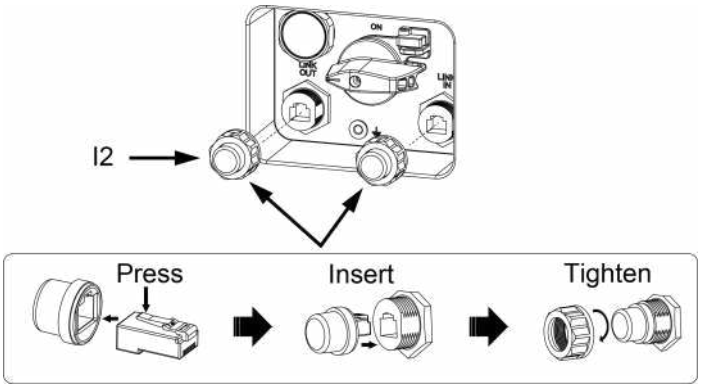

Step 2: Connect the inverter cables:

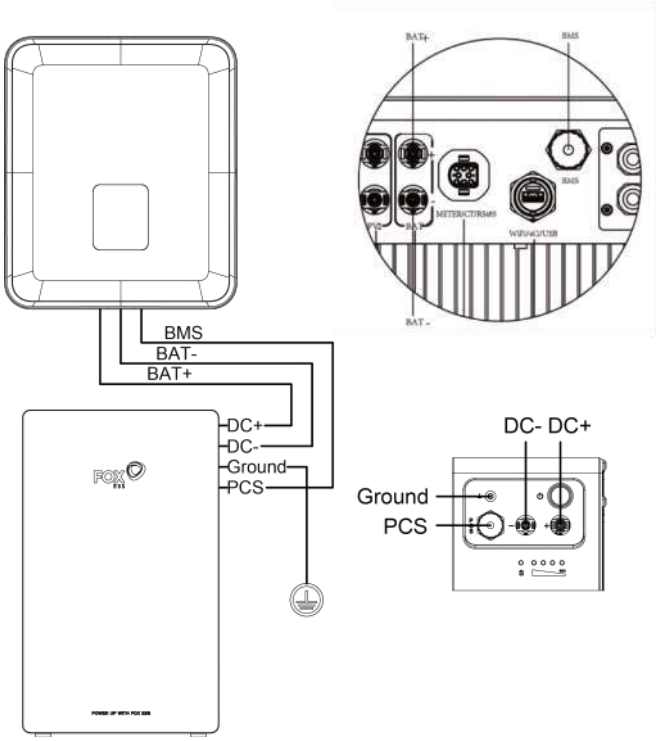

Note:
Power Cable (L2) must be pulled straight from the battery DC+/- for more than 80mm before bending. Make sure that the power cable connected to the inverter is connected vertically and that the vertical length is greater than 30 cm. If the cable is bent close to the terminals, it may cause poor line contact and result in burnt terminals.

a. Connect the Ground Cable (K2) to the ground.

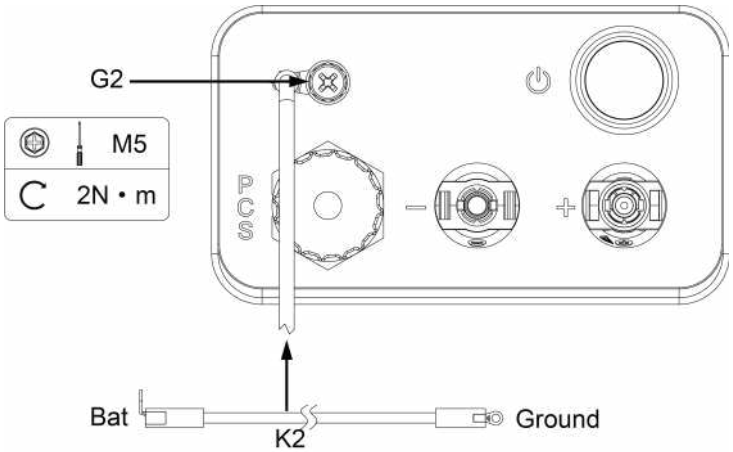

b. Connect the PCS Communication Cable (J2) to the BMS port on the inverter.

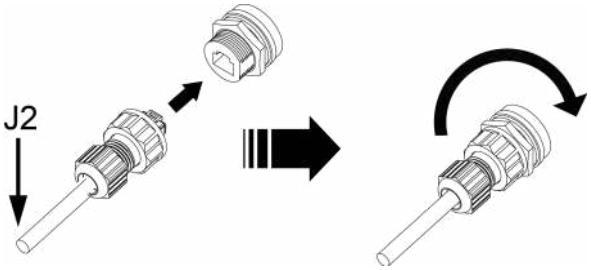

c. Remove the waterproof bridge from DC+ and DC-, then insert the Power Wire (L2) into DC+ and DC-.

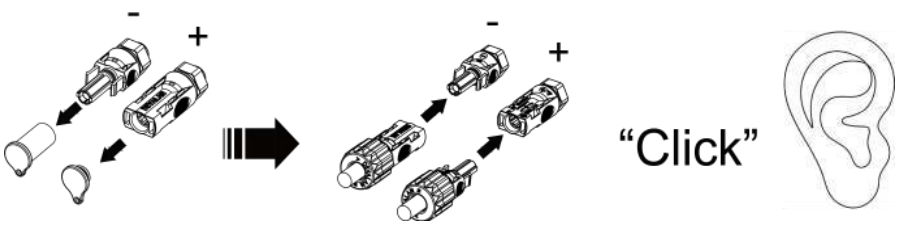

Parallel Mode：

Step 1: Connect the parallel cables:

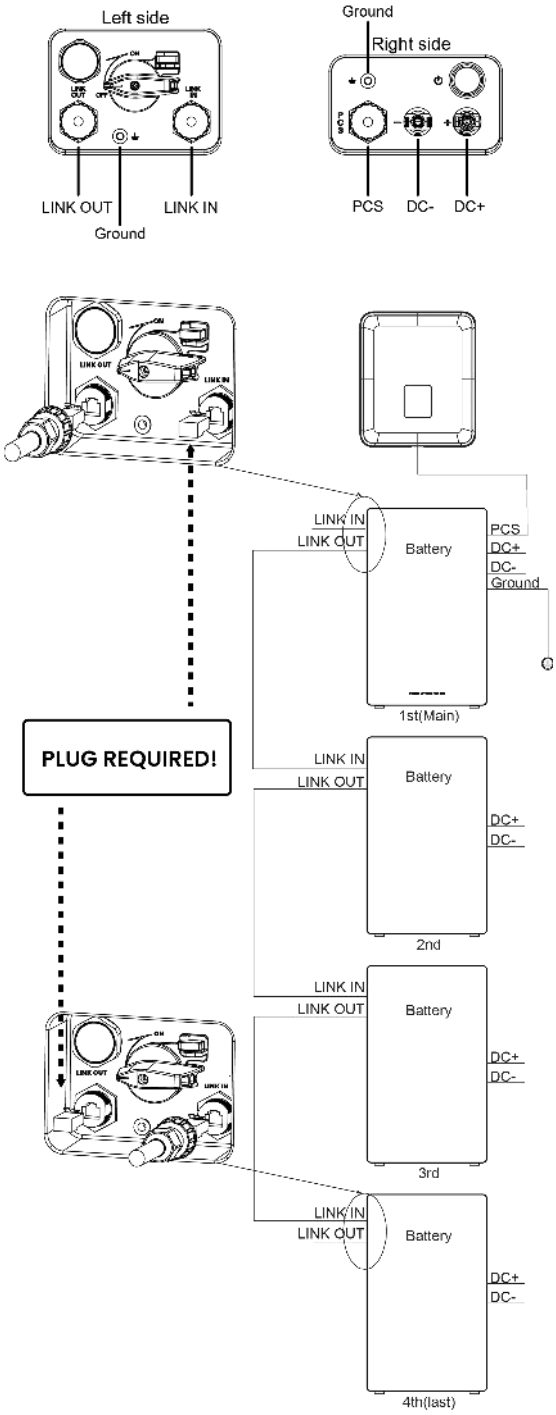

The steps for parallel connection of batteries is as follows:
a. Insert the Parallel Plug (I2) into the LINK IN port, this battery is defined as the **Main** battery (whichever battery can be set as the **Main**).
b. Connect the Ground Cable (K2) from the ground terminal of the **Main** battery (left side of the battery) to the ground terminal of the next battery (right side of the battery), and continue the same connection until the ground terminal of the last battery (left side of the battery).
c. Use the PCS Communication Cable(J2) to cross-connect the LINK OUT of the previous battery with the LINK IN of the next battery. Start from the LINK OUT of the **Main** and continue until reaching the LINK IN port of the last battery.
d. Insert the Parallel Plug (I2) into the LINK OUT port of the last connected battery.
Note 1: The steps of inserting the Parallel Plug (I2) are as follows:

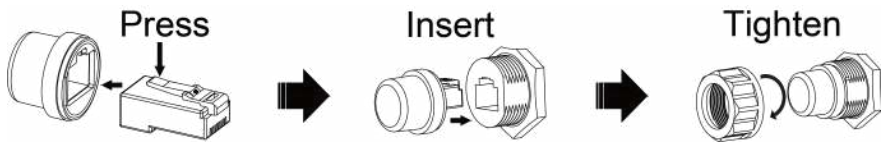

Note 2: The steps of installing the parallel communication wire are as follows:

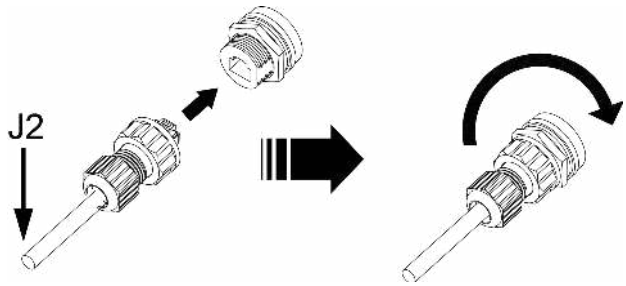

Step 2: Connect the inverter cables:

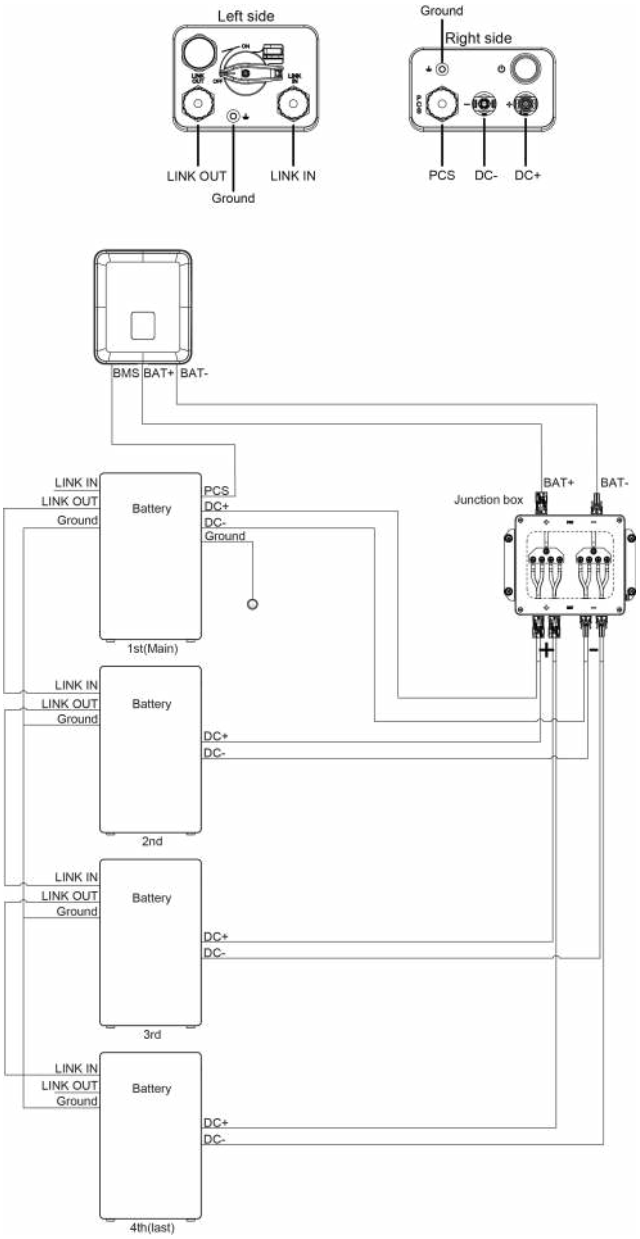

Note:
Keep a distance of 300-600mm from the battery to the junction box. Power Cable (L2) must be pulled straight from the battery DC+/- for more than 80mm before bending.
Make sure that the power cable connected to the inverter is connected vertically and that the vertical length is greater than 30 cm. If the cable is bent close to the terminals, it may cause poor line contact and result in burnt terminals.
a. Connect the Ground Cable (K2) of the **Main** battery to the ground.

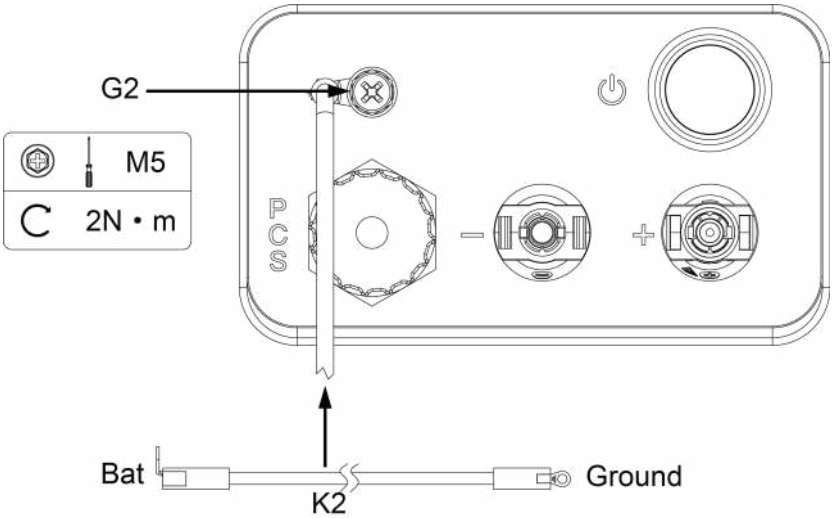

b. Connect the PCS Communication Cable (J2) of the **Main** battery to the BMS communication port of the inverter.

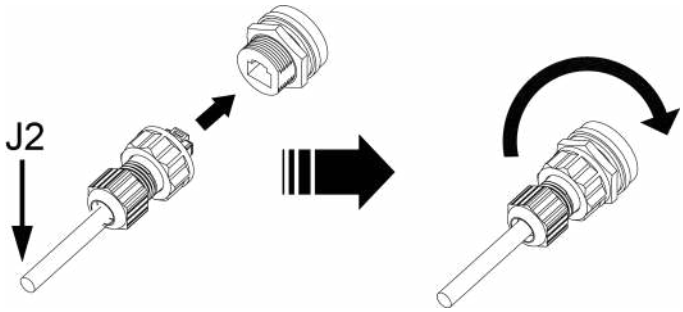

c. Connect the Power Cable (L2) of each battery to the junction box (need to purchase separately).Connect the output power cable of the junction box to the battery port of the inverter.

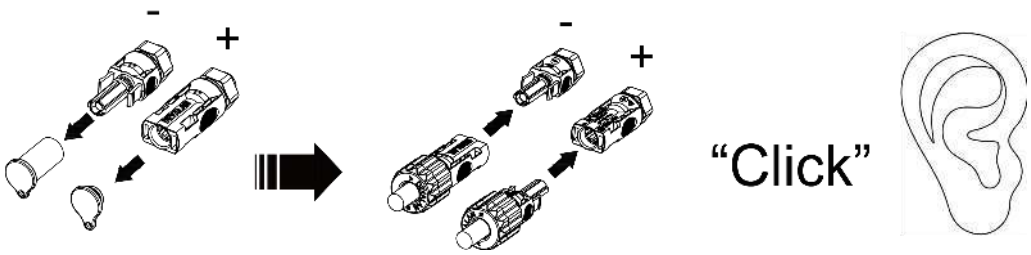

8.3 EP10/11

8.3.1 Items in the package

Please check if following items are including with the package:

Battery×1(A2)

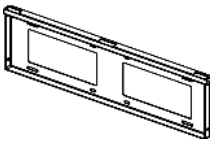

Bracket(wall)×1(B2)

Bracket(battery)×3(C2)

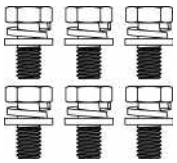

M6×12 Screw×6 (D2)

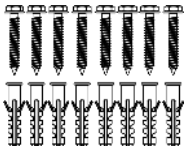

D8 Plastic Expansion Tube×8(E2)

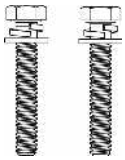

M5×30 Screws×2(F2)

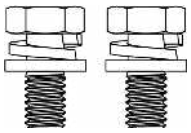

M5×10 Screws×1(G2)

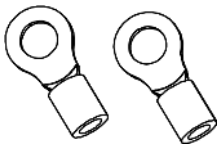

OT Terminal×2(H2)

Parallel Plug×2(I2)

PCS Communication Cable (3m)×1(J2)

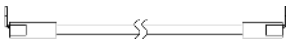

Ground Cable (3m)×1(K2)

Power Cable (3m)×1(L2)

Power Connector Puller×1(M2)

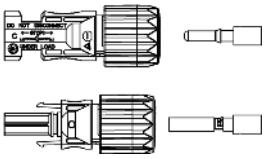

Terminal PV×2(N2)

Quick Installation Guide×1(N2)

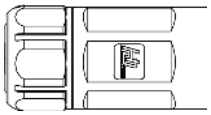

PCS RJ45 Waterproof Connector(P2)

8.3.2 Clearance

Standing mounting：

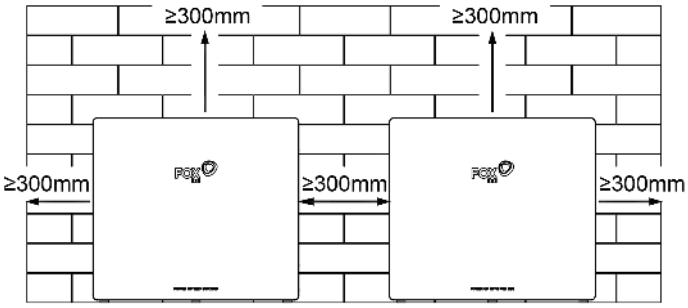

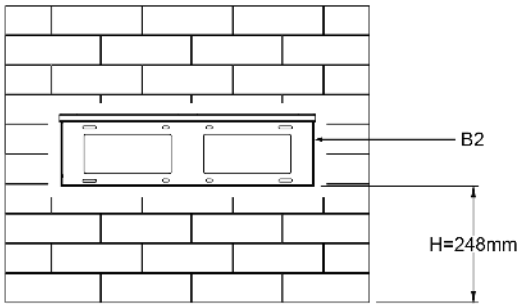

Wall mounting:

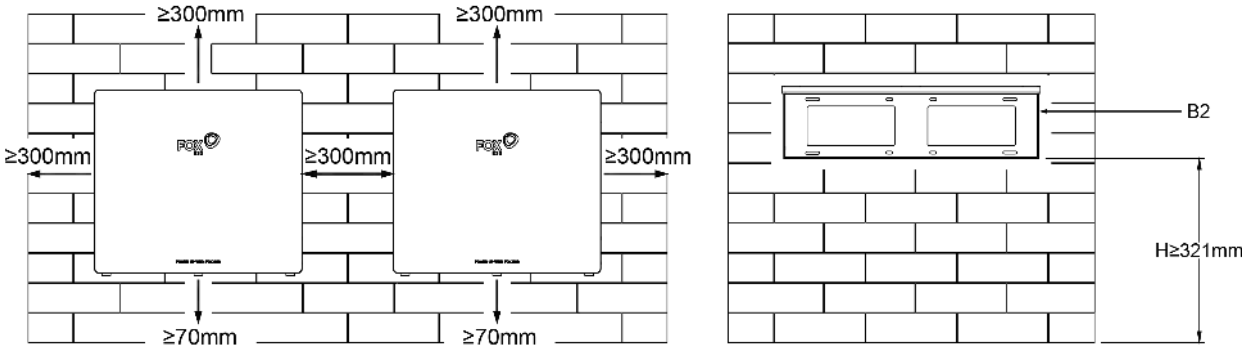

Make sure to leave a space of at least 300 mm. A clearance of at least 300 mm must be left around the battery pack for proper cooling.

Note: Make sure that the battery pack is always exposed to the ambient air. The battery pack is cooled by natural convection. If the battery pack is entirely or partially covered or shielded, it may cause the battery pack to stop operating.

8.3.3 Installation Steps

Step 1: The steps for installing the bracket are as follows:
a. Place the bracket against the wall, adjust the hole position with a Spirit Level (K1) , and mark the positions of the 8 holes.
b. Remove the bracket, drill the holes with a hammer drill (φ8mm, depth range 45-50mm), and tighten the expansion bolts to ensure that the bracket is securely installed.
c. Fix the bracket to the wall with ST6×40 screws (E2) , ensuring that the bracket is installed in a horizontal position.

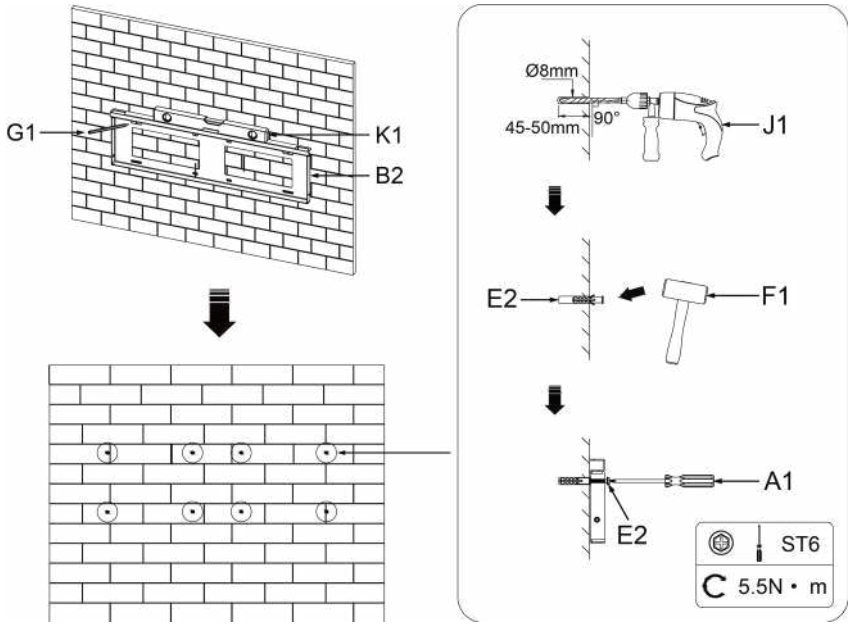

Step 2: The steps for installing the battery on the wall are as follows:
a. Align the buckle of the battery bracket with the holes of mounting bracket on the wall, then place the battery from top to bottom.
b. Observe the left and right sides of the bracket to ensure that the holes of the battery bracket and mounting bracket on the wall are aligned.

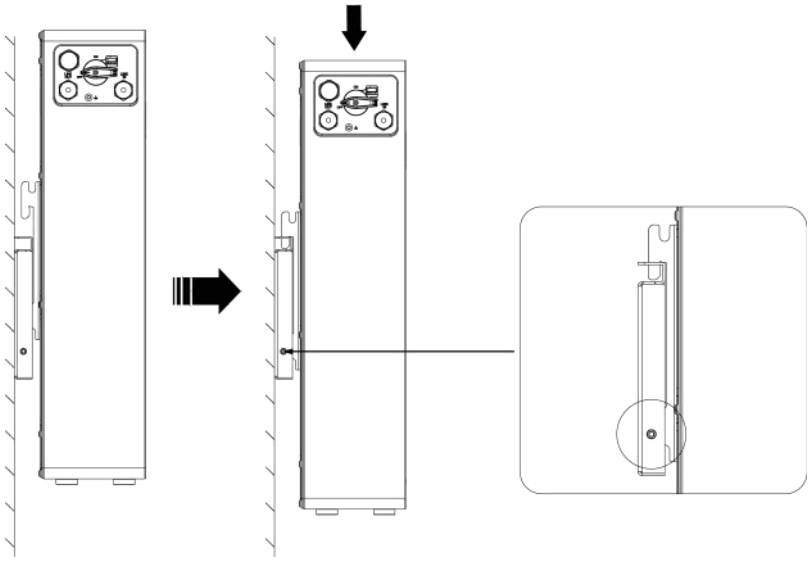

Step 3: Insert 2 pcs of M5×30 screws (F2) into the holes on the left and right sides of the mounting bracket then tighten the screws.

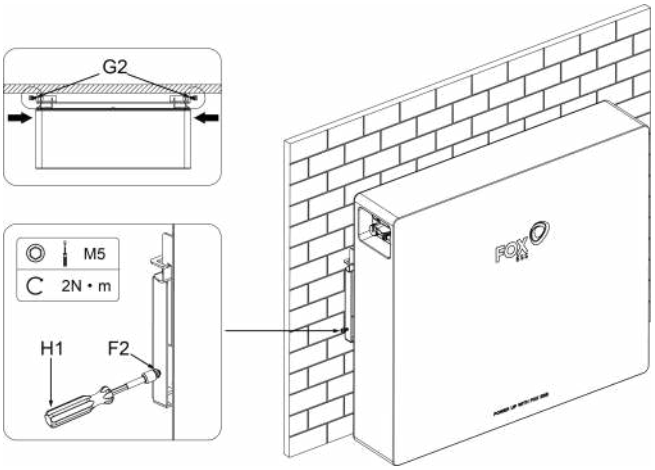

Stand-alone mode：

Step 1: Insert the 2 parallel plugs (I2) into the LINK IN and LINK OUT ports respectively.

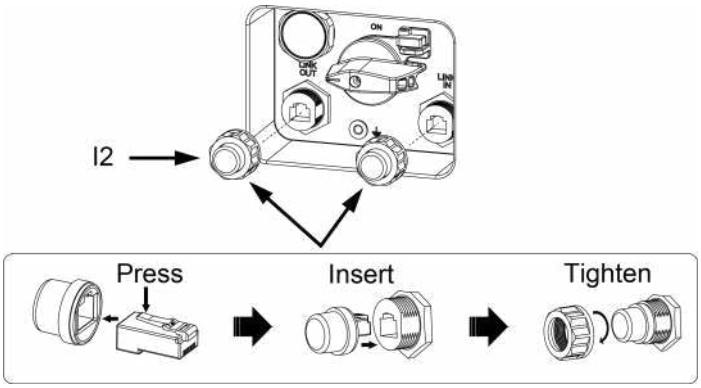

Step 2: Connect the inverter cables:

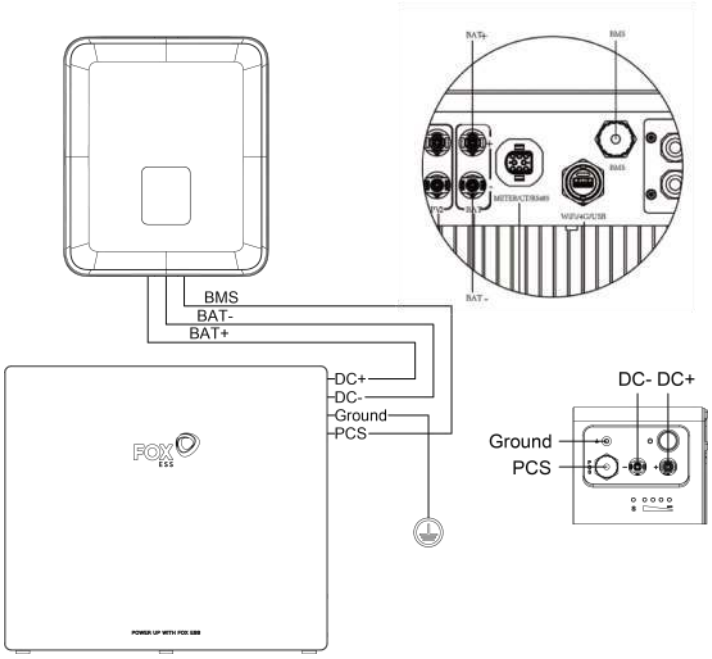

Note:
Power Cable (L2) must be pulled straight from the battery DC+/- for more than 80mm before bending. Make sure that the power cable connected to the inverter is connected vertically and that the vertical length is greater than 30 cm. If the cable is bent close to the terminals, it may cause poor line contact and result in burnt terminals.

a. Connect the Ground Cable (K2) to the ground.

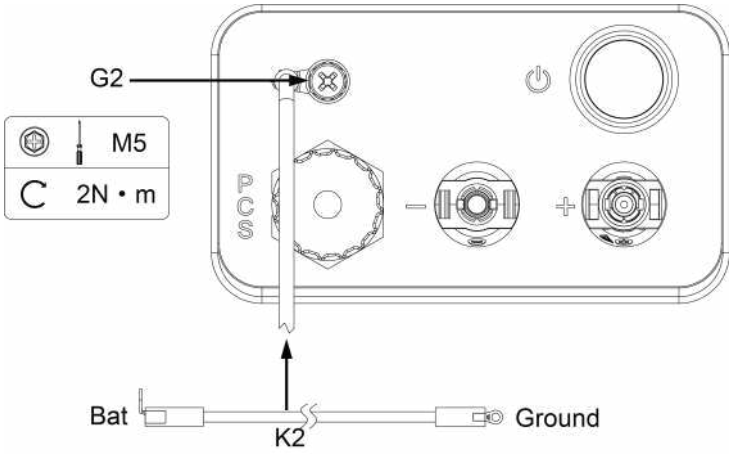

b. Connect the PCS Communication Cable (J2) to the BMS port on the inverter.

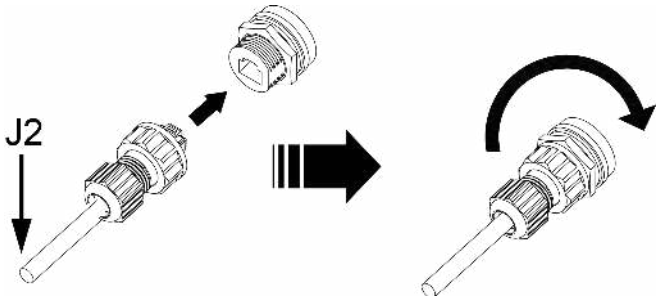

c. Remove the waterproof bridge from DC+ and DC-, then insert the power wire (L2) into DC+ and DC-.

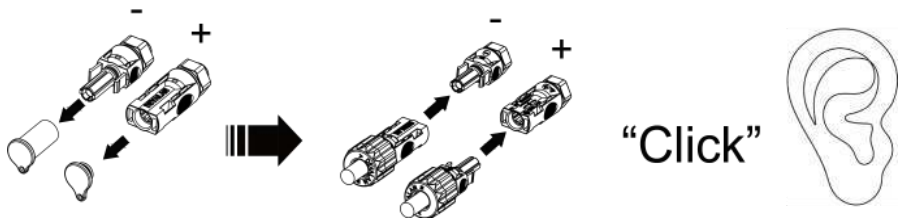

Parallel Mode:

Step 1: Connect the parallel cables:

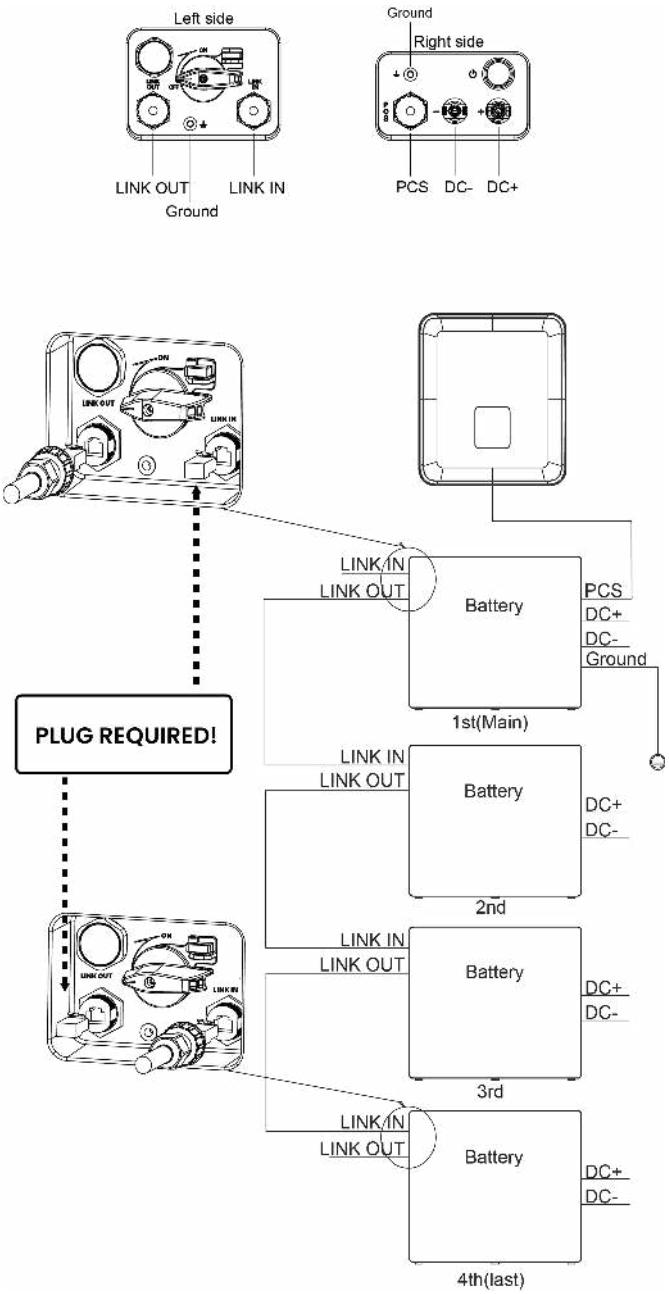

The steps for parallel connection of batteries are as follows:
a. Insert the Parallel Plug (I2) into the LINK IN port, this battery is defined as the **Main** battery (whichever battery can be set as the **Main**).
b. Connect the Ground Cable (K2) from the ground terminal of the **Main** battery (left side of the battery) to the ground terminal of the next battery (right side of the battery), and continue the same connection until the ground terminal of the last battery (left side of the battery).
c. Use the PCS Communication Cable(J2) to cross-connect the LINK OUT of the previous battery with the LINK IN of the next battery. Start from the LINK OUT of the **Main** and continue until reaching the LINK IN port of the last battery.
d. Insert the parallel plug (I2) into the LINK OUT port of the last connected battery.
Note 1: The steps of inserting the Parallel Plug (I2) are as follows:

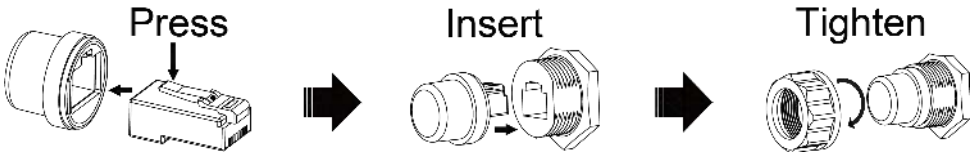

Note 2: The steps of installing the parallel communication wire are as follows:

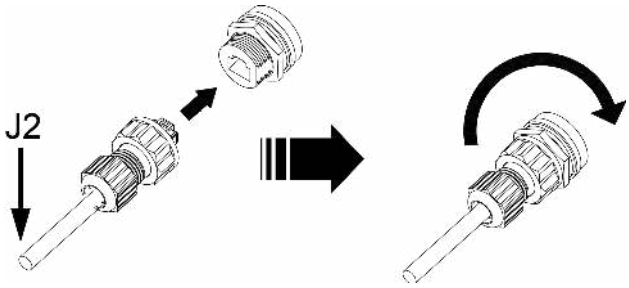

Step 2: Connect the inverter cables:

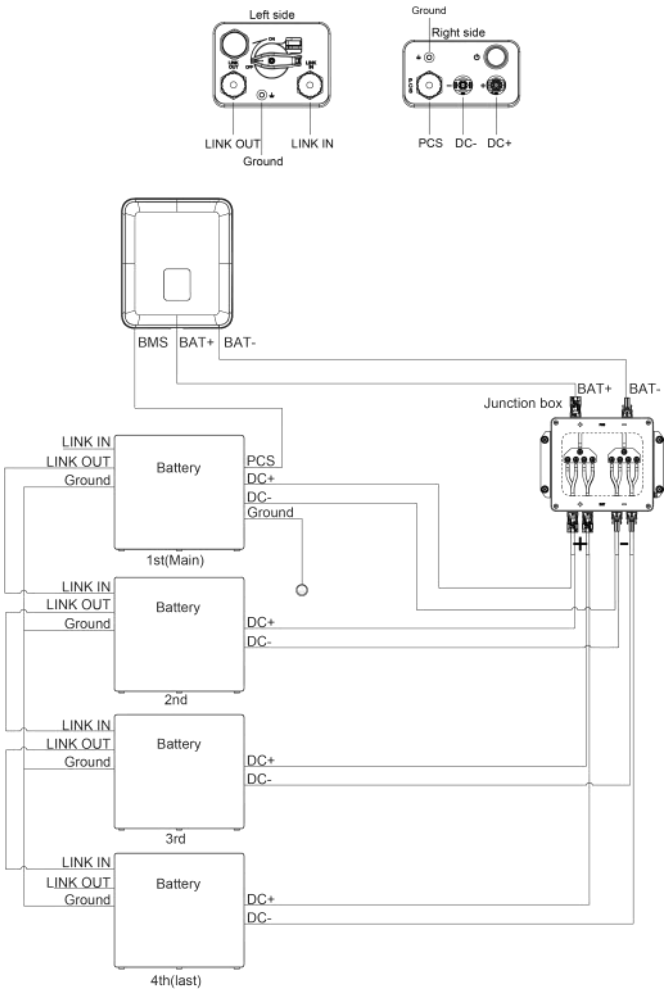

Note:
Keep a distance of 300-600mm from the battery to the junction box. Power Cable (L2) must be pulled straight from the battery DC+/- for more than 80mm before bending.
Make sure that the power cable connected to the inverter is connected vertically and that the vertical length is greater than 30 cm. If the cable is bent close to the terminals, it may cause poor line contact and result in burnt terminals.

a. Connect the ground cable (K2) of the **Main** battery to the ground.

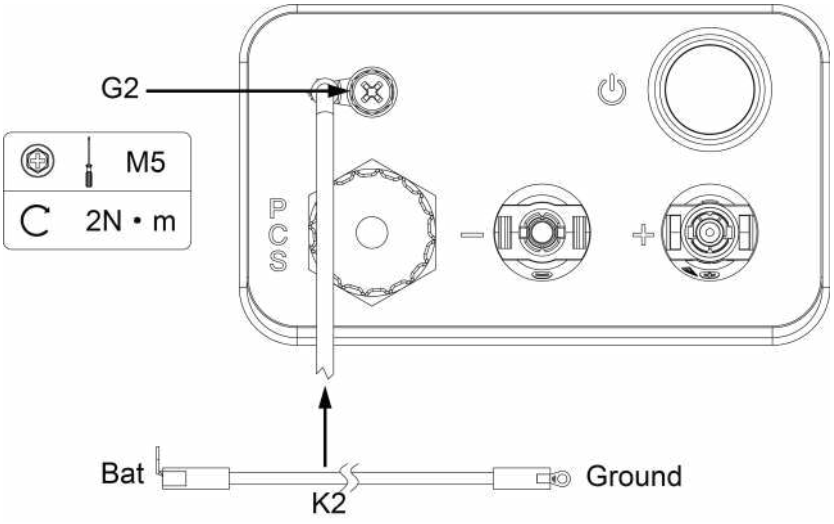

b. Connect the PCS Communication Cable (J2) of the **Main** battery to the BMS communication port of the inverter.

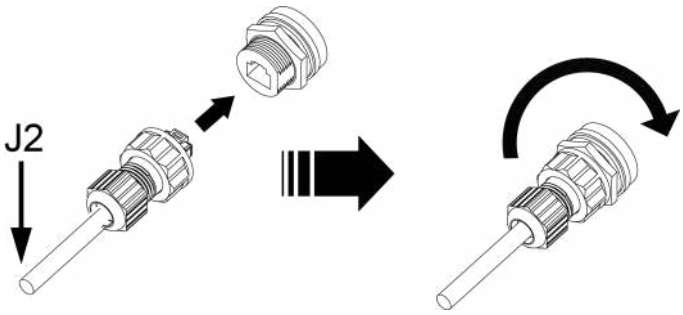

c. Connect the Power Cable (L2) of each battery to the junction box (need to purchase separately).Connect the output power cable of the junction box to the battery port of the inverter.

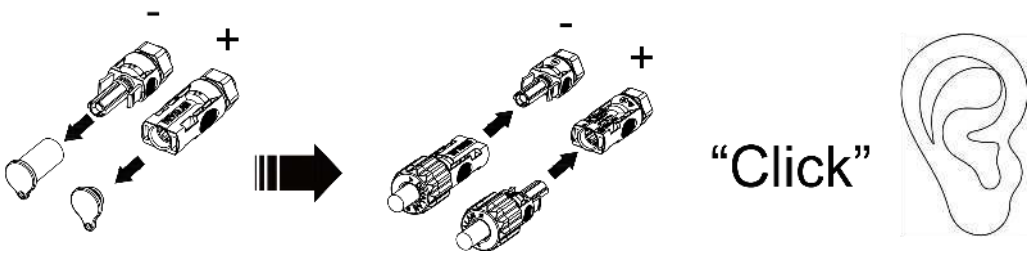

8.4 System Operation

- When the grid connected system is started, the inverter should be turned on first to avoid the current pulse of the inverter increasing to the battery pack.
- All installation and operation must comply with local electrical standards.
- Check all power cables and communication cables carefully.

System Start Up:
When the inverter is connected to the PV and the grid and both are operating normally, turn on the battery DC Switch.
Press the POWER Switch and hold it for 3 seconds, then release. The Status LED of each battery is blinking green and indicates that the system is working normally.

System Shut Down:
Press and hold the POWER Switch for at least 5 seconds until all of the battery LEDs (BMS Status LED and SOC LED) begin blinking. Once they start blinking, release the switch. The lights will automatically turn off after 5 seconds. Then, turn off the DC Switch.

System Black Start:
Under special circumstances when both PV and Grid power are out of order, the battery can be activated through the "Black Start" function. This means that our energy storage inverter and battery can continue to operate. The startup steps for black start are as follows:
Turn on the DC Switch, press and hold the power button for 3 seconds, then release.
Press the “Power Switch” button three times in succession within 4 seconds (Complete within 30 seconds after the battery system starts up).
At least one battery's Status LED remains solid green, indicating successful activation of Black Start mode.

System Stop:

- If user needs to stop the battery, they can press and hold the Power Switch for more than 5s until all LEDs flash and release it. When all LEDs turn off, it indicates that the system has stopped running.

Note: Do not stop the battery during charging and discharging.

Note:
Ensure correct battery-inverter connection prior to black start. No wiring modifications during black start.

9. Commissioning

There are five LED indicators to show its operating status.
Different symbols indicate different flashing modes, and the explanation is as follows:

Symbol	Status
■	LED flash display (on: 0.5S，off: 0.5S)
/	LED off display
●	LED on display

SOC status indicated by indicator:

SOC	Status	S	SOC(LED4-1)			
100% ≥ SOC > 75%	Standby	■	●	●	●	●
75% ≥ SOC > 50%		■	/	●	●	●
50% ≥ SOC > 25%		■	/	/	●	●
25% ≥ SOC ≥ 0%		■	/	/	/	●
=100%	Charge	●	●	●	●	●
100% > SOC ≥ 75%		●	■	■	■	■
75% > SOC ≥ 50%		●	/	■	■	■
50% > SOC ≥ 25%		●	/	/	■	■
25% > SOC ≥ 0%		●	/	/	/	■
100% ≥ SOC > 75%	Discharge	●	●	●	●	●
75% ≥ SOC > 50%		●	/	●	●	●
50% ≥ SOC > 25%		●	/	/	●	●
25% ≥ SOC ≥ 0%		●	/	/	/	●

Fault status indicated by indicator:

Fault	S	SOC(LED4-1)			
Under voltage fault	■	/	/	/	●
Over voltage fault	■	/	/	●	/
Over temperature fault	■	/	/	●	●
Under temperature fault	■	/	●	/	/
Discharge over current	■	/	●	/	●
Charge over current	■	/	●	●	/
Reserve	■	/	●	●	●
Parallel addressing failure	■	●	/	/	/
Pre-Charge failed	■	●	/	/	●
Short circuit protection	■	●	/	●	/
AFE communication failed	■	●	/	●	●
Module addressing failed	■	●	●	/	/
Internal communication failed	■	●	●	/	●
Power parallel failure	■	●	●	●	/
PCS communication failed	■	●	●	●	●
HVB FUSE fault	●	/	/	/	●
Current sampling fault	●	/	/	●	/
Module not match	●	/	/	●	●
Internal total voltage sampling failed	●	/	●	/	/
Temperature sampling failed	●	/	●	/	●
Relay adhesion	●	/	●	●	/
Relay not close	●	/	●	●	●
Relay drive failed	●	●	/	/	/
Cell "0V" fault	●	●	/	/	●
Temperature high permanent failed	●	●	/	●	/
The single voltage high permanently failed	●	●	/	●	●
SOH low protection	●	●	●	/	/
AFE failed (UV/OV/UT/OT)	●	●	●	/	●
Charger overvoltage	●	●	●	●	/
Other fault	●	●	●	●	●

10. Exclusion

The warranty shall not cover the defects caused by normal wear and tear, inadequate maintenance, handling, storage faulty repair, modifications to the battery or pack by a third party other than manufacturer or manufacturer agent, failure to observe the product specification provided herein or improper use or installation, including but not limited to the following.

- Damage during transport or storage.
- Incorrect installation of battery into pack or maintenance.
- Use of battery or pack in inappropriate environment.
- Improper, inadequate, or incorrect charge, discharge or production circuit other than stipulated herein.
- Incorrect use or inappropriate use.
- Insufficient ventilation.
- Ignoring applicable safety warnings and instructions.
- Altering or attempted repairs by unauthorized personnel.
- In case of force majeure (ex: lightning, storm, flood, fire, earthquake, etc.).
- There are no warranties-implied or express-other than those stipulated herein. Manufacturer shall not be liable for any consequential or indirect damages arising or in connection with the product specification, battery or pack.

11. Troubleshooting and Maintenance

11.1 Maintenance

1) It is recommended that the battery storage time is not more than 6 months.
2) For the first installation, the interval among manufacture dates of battery modules shall not exceed 3 months.
3) Regularly check whether the service environment of the battery meets the requirements, and the installation position should be far away from the heat source.
4) The battery module should be stored in an environment with a temperature range between 0°C-35°C, and charged regularly according to the table below with no more than 0.5 C(A C-rate is a measure of the rate at which a battery is discharged relative to its maximum capacity) to the SOC of 50% after a long time of storage.

Storage environment temperature	Relative humidity of the storage environment	Storage time	SOC
Below 0°C	/	Not allowed	/
0~35°C	45%~85%	≤ 6 months	20%≤SOC≤50%
Above 35°C	/	Not allowed	/

NOTICE
● If the battery is stored over one year, 5% - 8% of the capacity may lose irreversibly.

5) Every year after installation. The connection of power connector, grounding point, power cable and screw are suggested to be checked. Make sure there is no loose, no broken, no corrosion at connection point. Check the installation environment such as dust, water, insect etc.

11.2 Expanded capacity requirement

If users want to increase their battery system capacity, please ensure that the manufacturer date of the new battery shall not exceed 12 months; in case of exceeding 12 months. please charge the new battery to around 50%.

11.3 Storage with Low SOC

After the product is powered off, static power consumption and self-discharge loss may occur in internal modules. Therefore, charge batteries in a timely manner and do not store the product in low SOC. Otherwise, the product may be damaged due to overdischarge, and battery modules need to be replaced.

Storage in low SOC may occur in the following scenarios:

- The DC SWITCH on the power control module is OFF.
- The power cables or signal cables are not connected.

- The batteries cannot be charged due to a system fault after discharge.
- The batteries cannot be charged due to incorrect configurations in the system.
- The batteries cannot be charged due to no PV input and long-term mains failure.
- The Link In and Link Out interface cables are not securely connected. Ensure proper attachment of both connectors during parallel operation.

Regardless of scenarios, the batteries must be charged within the longest interval corresponding to the SOC when the batteries are powered off. If the batteries are not charged within the specified interval, they may be damaged due to overdischarge.

Storage environment temperature	Power-Off SOC Before Storage	Maximum Charge Interval
0~35 ℃	0% ≤ SOC < 5%	7 days

Note: When the battery SOC decreases to 0%, charge the batteries within seven days. Permanent battery faults caused by delayed charge due to customer reasons are beyond the warranty scope.

11.4 Low-Temperature Battery Reserve

The battery system includes an automatic low-temperature protection feature. It proactively manages the battery to maintain adequate charge, extending standby time when temperatures drop.

11.5 Troubleshooting

When the S LED on the panel is flashing or normally on, it does not mean that the battery is abnormal, it may be just an alarm or protection. Please check the “Fault status indicated by indicator” in Chapter 9 for the detailed faulty definition before any trouble-shooting steps. In general, the alarm indication is normal without manual intervention. When the alarm triggering state is removed, the battery will automatically return to normal use.

- Problem determination based on the following points

1) Whether the green light on the power switch is on;
2) Whether the battery system can be communicated with inverter;
3) Whether the battery can be output voltage or not.

- Preliminary determination steps

Battery system cannot work, When the DC Switch is turned on and the Power Switch is pressed, the LED doesn’t light up or flash, please consider contact the local distributor.

1) The LED display of BMS is normal, but it cannot charge and discharge. Observe the display screen of inverter and there is no SOC. Please check whether the communication between BMS to inverter is well connected. If the connection is good, please replace communication cable. If the SOC is still not visible on the inverter display screen, please contact the local distributor.
2) After the battery system is powered on, if you can see the alarm information on the LED and inverter display screen at the same time, please contact the local distributor.

The copyright of this manual belongs to FOXESS CO., LTD. Any corporation or individual should not plagiarize, partially or fully copy (including software, etc.), and no reproduction or distribution of it in any form or by any means is permitted. All rights reserved.

FOXESS CO., LTD.

Add: No.939, Jinhai Third Road, New Airport Industry Area, Longwan District, Wenzhou, Zhejiang, China

Tel: 0510- 68092998

Web: WWW.FOX-ESS.COM

V1.0.6
10-500-10352-01